M400 Simplex Pump User Guide

Control Techniques

Software for M400

Part Number: OLY-0000-0001 Issue Number: 6.1

Title	**M400 Simplex Pump User Guide**
Document revision	OLY-0000-0001 7.0
File	C:\TeamFoundationServer\Eden Prairie\M400 Simplex Pump\Dev [Proprietary]\M400 Simplex Pump Documents\M400 Simplex Pump User Guide OLY-0000-0001 Iss6.docx
Date	June, 2014
Authors	David Larson

Revision History

Rev	Author	Date	Description
1.0 to 4.0	David Larson		Internal development
5.0	David Larson	6/26/14	Draft, Reviewed by Shawn Kraft.
6.0	David Larson	9/03/14	Release, Reviewed by Kevin Manton.
6.1	Nick Holmgard	01/18	Review, Nick Holmgard

Save Date: March 1, 2018
File: C:\TeamFoundationServer\Eden Prairie\M400 Simplex Pump\Dev [Proprietary]\M400 Simplex Pump Documents\OLY-0000-0001 M400 Simplex Pump User Guide Iss6.docx
Author: David Larson

Safety Information

Persons supervising and performing the electrical installation or maintenance of a Drive and/or an external Option Unit must be suitably qualified and competent in these duties. They should be given the opportunity to study and if necessary to discuss this User Guide before work is started.

The voltages present in the Drive and external Option Units are capable of inflicting a severe electric shock and may be lethal. The Stop function of the Drive does not remove dangerous voltages from the terminals of the Drive and external Option Unit. Mains supplies should be removed before any servicing work is performed.

The installation instructions should be adhered to. Any questions or doubt should be referred to the supplier of the equipment. It is the responsibility of the owner or user to ensure that the installation of the Drive and external Option Unit, and the way in which they are operated and maintained complies with the requirements of the National Electrical Code and any additional state or local codes.

The Drive software may incorporate an optional Auto-start facility. In order to prevent the risk of injury to personnel working on or near the motor or its driven equipment and to prevent potential damage to equipment, users and operators, all necessary precautions must be taken if operating the Drive in this mode.

The Stop and Start inputs of the Drive should not be relied upon to ensure safety of personnel. If a safety hazard could exist from unexpected starting of the Drive, an interlock should be installed to prevent the motor being inadvertently started.

General Information

The manufacturer accepts no liability for any consequences resulting from inappropriate, negligent or incorrect installation or adjustment of the optional operating parameters of the equipment or from mismatching the variable speed drive (Drive) with the motor.

The contents of this guide are believed to be correct at the time of printing. In the interests of a commitment to a policy of continuous development and improvement, the manufacturer reserves the right to change the specification of the product or its performance, or the contents of this guide, without notice.

Drive firmware version

This product is supplied with the latest firmware version. If this drive is to be connected to an existing system or machine, all drive firmware versions should be verified to confirm the same functionality as drives of the same model already present. This may also apply to drives returned from a Control Techniques Service Centre or Repair Centre. If there is any doubt please contact the supplier of the product.

The firmware version of the drive can be checked by looking at Pr 11.029.

Environmental statement

Control Techniques is committed to minimizing the environmental impacts of its manufacturing operations and of its products throughout their life cycle. To this end, we operate an Environmental Management System (EMS) which is certified to the International Standard ISO 14001. Further information on the EMS, our Environmental Policy and other relevant information is available on request, or can be found at www.greendrives.com.

The electronic variable-speed drives manufactured by Control Techniques have the potential to save energy and (through increased machine/process efficiency) reduce raw material consumption and scrap throughout their long working lifetime. In typical applications, these positive environmental effects far outweigh the negative impacts of product manufacture and end-of-life disposal.

Nevertheless, when the products eventually reach the end of their useful life, they must not be discarded but should instead be recycled by a specialist recycler of electronic equipment. Recyclers will find the products easy to dismantle into their major component parts for efficient recycling. Many parts snap together and can be separated without the use of tools, while other parts are secured with conventional fasteners. Virtually all parts of the product are suitable for recycling.

Product packaging is of good quality and can be re-used. Large products are packed in wooden crates, while smaller products come in strong cardboard cartons which themselves have a high recycled fibre content. If not re-used, these containers can be recycled. Polythene, used on the protective film and bags for wrapping product, can be recycled in the same way. Control Techniques' packaging strategy prefers easily-recyclable materials of low environmental impact, and regular reviews identify opportunities for improvement.

When preparing to recycle or dispose of any product or packaging, please observe local legislation and best practice.

REACH legislation

EC Regulation 1907/2006 on the Registration, Evaluation, Authorization and restriction of Chemicals (REACH) requires the supplier of an article to inform the recipient if it contains more than a specified proportion of any substance which is considered by the European Chemicals Agency (ECHA) to be a Substance of Very High Concern (SVHC) and is therefore listed by them as a candidate for compulsory authorization.

For current information on how this requirement applies in relation to specific Control Techniques products, please approach your usual contact in the first instance. Control Techniques position statement can be viewed at: http://www.controltechniques.com/REACH

Contents

1 Introduction

1.1 Who Should Read This Manual?

This manual is intended to assist the user in commissioning the application software and should be read in conjunction with the documentation that is supplied with the drive and other associated hardware. The safety systems that are required to prevent risk of injury to persons operating or maintaining the machine are not included in this manual. The user must be familiar with and able to implement the required safety systems. This manual assumes that the user is familiar with relevant Control Techniques products and understands the requirements for the application.

If you do not feel confident of the above, then you should contact your local Control Techniques Automation Center or distributor to obtain assistance or service.

1.2 References

User Guide Unidrive M400	Part Number 0478-0044-xx
Unidrive M400 Quick Start Guide	Part Number 0478-0040-xx
Unidrive M400 Large Frame Quick Start Guide	Part Number 0478-0110-xx
SI-I/O User Guide	Part Number 0478-0047-xx
Remote Keypad Installation sheet	Part Number 0478-0105-xx
M400 Simplex Pump F/W (a file)	Part Number 401849-01
M400 Simplex Pump Parameter (a file)	Part Number 401849-02
M400 Simplex CTVue Pump Configuration (a file)	Part Number 401849-03
M400 CTVue Simplex Pump User Manual	Part Number 401849-05

1.3 Other system options - Multiplex Pumping

This user guide covers the M400 Simplex Pump, which is a single Motor/Pump with a drive. For larger systems Control Techniques offers the Multiplex Pump. Multiplex Pump is a multiple motor/pump with multiple drives for greater redundancy, capacity and electrical efficiency.

1.4 Application Overview

The Simplex Pumping Solutions drive is an effective and versatile control system for maintaining constant pressure or flow in a single pump configuration. An embedded controller in the motor drive eliminates the need for an external PLC saving cost, space, and programming time. The system consists of a M400 variable frequency motor drive loaded with a Simple Pump Application and pump drive parameters set. A SI- I/O module is optional and provides an additional 8 digital input/outputs for control purposes and 2 programmable relay output for status monitoring. See Section 5, Electrical Installation for details.

The flexibility of the Simplex Pump drive allows the user to operate and run the pump from the built-in keypad without the need to interface with other control equipment. If additional functionality is desired, I/O terminals may be utilized including definable output status relays. An optional CTVue panel provides

a Human Machine Interface (HMI) with additional features of email alerts, remote Web access, value timing, flow monitoring, and logging.

Pressure feedback must be provided from a pressure transducer to a 4-20 mA analog signal. The system will control pressure based on transducer feedback alone or in conjunction with a flow switch.

All models of the M400 drive are available with the Pumping Solutions control software.

1.4.1 Pump Operation

The pump modes are Hand-Off-Auto. HAND mode runs the pump at a user defined fixed speed. In Auto mode the pump automatically adjusts the motor speed to maintain a constant pressure. The full features of the Pump control are used in Auto mode. In Auto Mode, the pump starts automatically with a start delay when a low pressure condition is detected, (e.g. Pressure Transducer signal goes below Low Pressure setpoint threshold). Initially, a pipe fill operation is performed to remove air from the pipes when enabled. A constant pressure PID control then regulates the system pressure to the setpoint. The pump control adjusts the motor speed in order to satisfy the demand and maintain constant pressure at the set value. If the pump detects a stop condition for a defined time period it will automatically stop. There are three stop conditions - “Software No Flow Detection”, “Sleep on low motor speed” and ”a physical flow switch indicates a no flow”. All three conditions can be individually enabled.

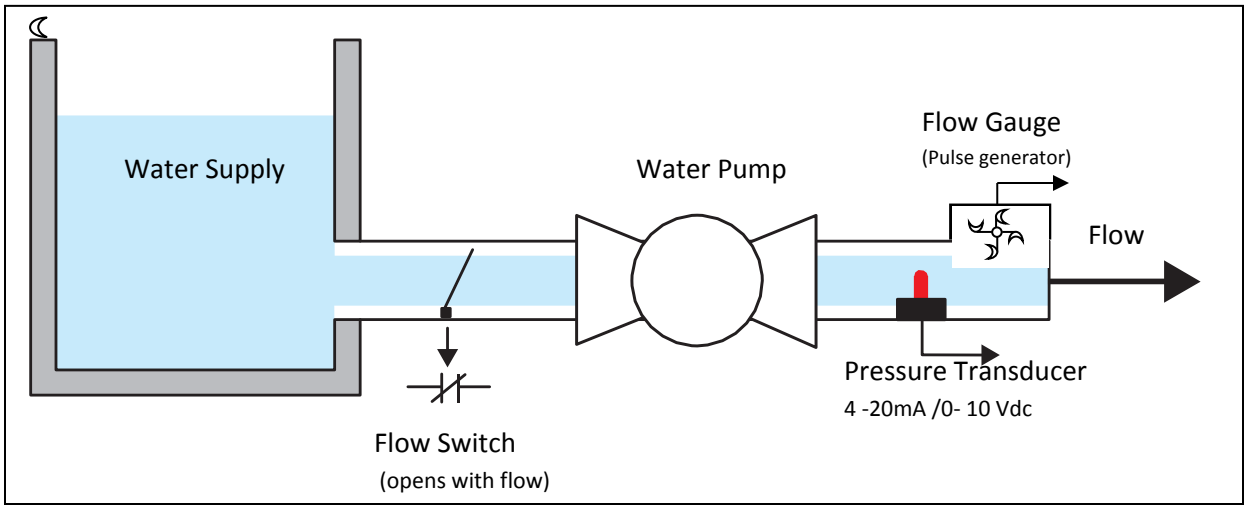

1.4.2 M400 Simplex Pump Protection Features

The M400 Simplex Pump application detects abnormal pump conditions and will shut the pump down.

- Overpressure warning. External signal indicates high pressure before shut down level.
- Overpressure shut down. Shut down pump on exceeding a pressure level.
- Under pressure shut down, Broken pipe detection.
- External Temperature shut down
- External Fault shut down
- Transducer loss detection and shut down (or run at set speed)
- Low suction detection (at maximum speed with no torque load)
- Current overload and over current faults. The drive limits and faults excessive current draw. This protects the system when the motor load goes above thresholds. This can be caused by bearing failure, water logged pressure tank, excessive current draw on motor start in a flow back condition.
- Standard Drive protection shut down Trips(see M400 User Guide)
- Fault logs hold the last 10 fault conditions for diagnostic and detection capability.

1.4.3 Pump Additional Operational Features

The M400 Simplex Pump application has additional operational features:

- A variable frequency drive is a soft start and reduces mechanical wear on the system.
- Controlling the acceleration and deceleration of the pump reduces hydraulic water hammer on the system.
- HAND Mode allows running the pump at a user defined speed
- Software No flow detection limits the maximum motor speed
- Pipe fill at every pump start cycle, with a user selected - duration, fixed selected speed and pressure threshold cut off.
- Over cycle detection to limit the number of starts within a hour. Either faults the drive or changes pressure set point.

- Flow meter support – scale and save Flow rate (GPM) and total gallons pumped.
- 4 optional pressure set points
- Dynamic V/F function optimizes the required motor voltage based on load, and therefore increases energy savings.

1.4.4 Pump I/O functions

The pump is controlled by digital inputs and status is reported by digital outputs.

Input functions are software functions that are activated with an on/off signal. Input functions are assigned to physical digital input terminal. When the signal is active to the terminal, the assigned input function will be activated.

Output Functions provide status from a software function. The software output function reports an on/off status. That status is assigned to digital output terminal.

Depending on your needs you will choose which of the Input and output functions you will map to the available terminals. The M400 has 2 I/O port terminals (configurable to input or output) , 5 digitals input terminals (T15 to be used for the optional Flow gauge) and 2 analog input terminals. If more I/O is required consider the SI-I/O option module.

Simplex Pump Software available Input Functions:

Auto mode on
Hand mode on
Flow switch (optional pump stop)
Clear gallon count from the flow meter
Select pressure set points (One of four pressure set points is selected using two input functions.)
External pump fault
External temperature fault

Simplex Pump Software available Output Functions:

System is ready
Loss of transducer detected
Over pressure alarm
Under pressure Fault detected
Low suction (Dry Well) detected
Auto Mode selected
Hand Mode selected
Running in Auto mode
Pipe fill completed
Within maximum speed bandwidth
Within Pressure bandwidth

Outputs (CTVue controlled):

2 Timed Value (From CTVue only)
Out of flow bandwidth (from CTVue only)

NOTE: The simplex Pump device can also be controlled over serial comms or a field bus by directly addressing the control parameters.

2 Ordering Codes

Any M400 drive model may be ordered with the Simplex Pumping software. There are several options available while ordering:

(a) M400 Drive with Simplex Pump Software factory loaded.
(b) CTVue Control Panel (model 306) with Simplex Pump interface software.
(c) Enclosure, the drive can be mounted in a Nema 3R enclosure to protect it from the elements. Outside enclosures may require additional circuitry for electrical noise suppression and lightning suppression.

All models of the M400 drive are available with the Pumping Solutions Pump Drive.

Adding a suffix -P to any M400 model number specifies it as a pump drive. The M400 will be loaded with pump specific program and default user parameter settings.

The optional CTVue Control Panel is an operator interface with a 6" TFT touch screen Display. An external +24 VDC power is required. The CTVue 306 communicates to the drive using the Adaptor Interface (AI-485) Module and CTVue to Drive cable

5 ft CT CTVUE-EP-485-005
15 ft CT CTVUE-EP-485-015
25 ft CT CTVUE-EP-485-025

Information on the features in the CTVue for the M400 pump can be found in "M400 CTVue Simplex Pump User Manual" [401849-05]

2.1 Additional Supporting Hardware

The items in this section are not available from Control Techniques, and will need to be purchased separately.

Required Pressure Transducer

A pressure transducer is the recommended configuration for Simplex Pump. The recommended transducer is the 4 to 20 ma or 20 to 4 ma versions, so that transducer failure can be detected.

Optional Flow Switch

The Flow switch can be used as a redundant backup to the transducer. A "NoFlow" indication from this switch will stop the pump.

Optional Flow Gauge

The Flow gauge provides a pulse output measuring the flow. This is connected to Terminal 15 and the M400 records the total gallons and flow rate. The Flow gauge is not used in the pump control.

Optional External Temperature sensor

The Drive accepts an external temperature input that will fault the drive with a trip.

Optional External Fault

The Drive accepts an external fault input that will fault the drive with a trip.

Plumbing Installation (not provided by Control Techniques)

The pump, couplers, pipes, values, reservoirs, etc.

2.2 M400 Model number

The way in which the model numbers for the Unidrive M range are formed is illustrated below:

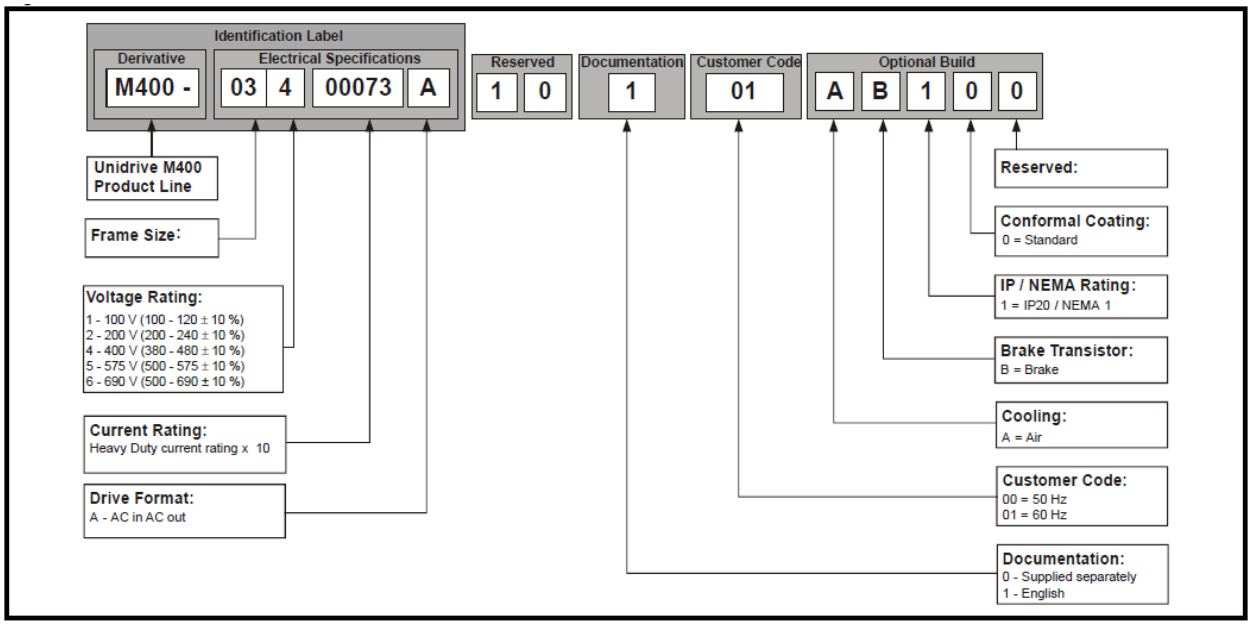

2.2.1 Select model based on Maximum Normal Duty Continuous Output Current Rating

Select the drive with a current rating equal to or greater than the motor max current. See the M400 User guide to find the Drive Model number and frame size.

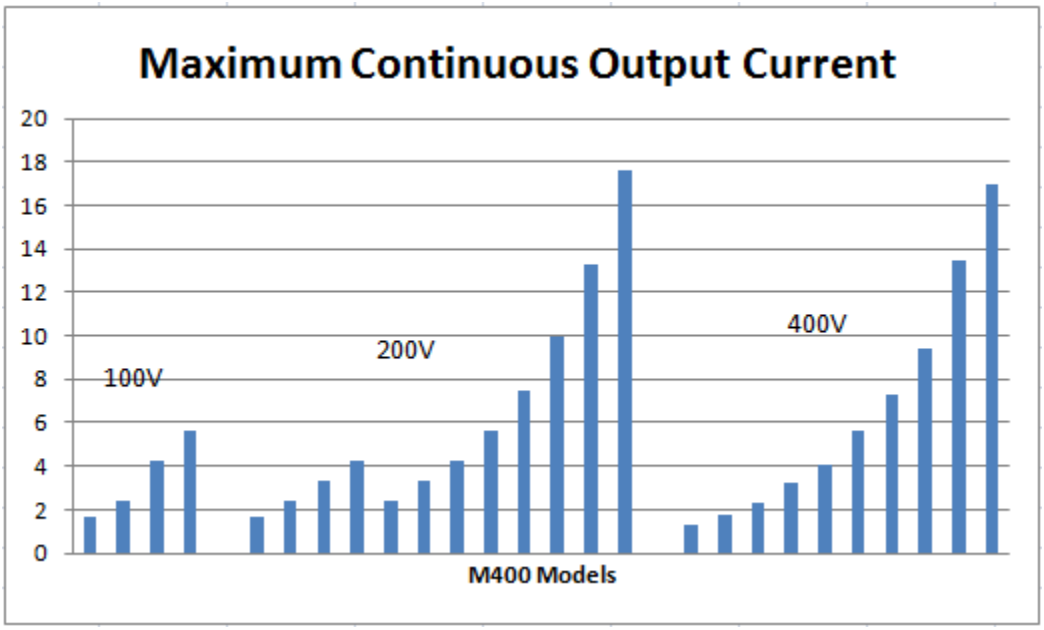

Operation of motor I^2t protection

Motor I^2t protection is fixed as shown below and is compatible with:

- Self ventilated (TENV/TEFC) induction motors

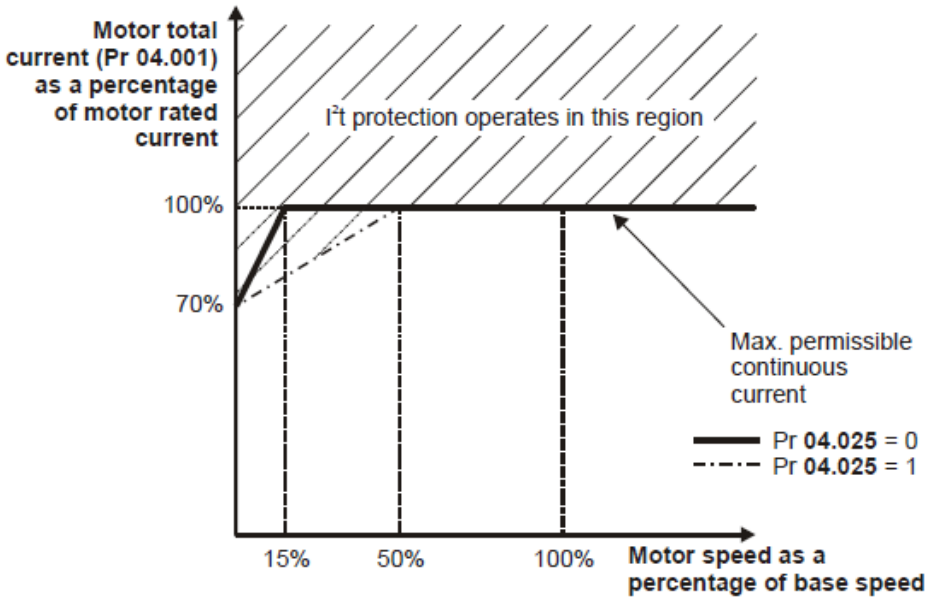

2.3 Options Available with an M400 Drive.

1. PC Communications
   a. Adaptor Interface (AI-485) Module for communications to your PC.
   b. CT Comms cable (USB cable to your PC)
2. Parameter File back up and loader
   a. AI-Back-up Adaptor is a Port adaptor that allows the drive to use a SD card for parameter cloning and program backup.
   b. SD card loaded with the Simplex Pump program and default parameter file.
   c. "Unidrive M Connect" PC Software to load parameter files.
3. System Integration (SI) modules
   a. SI-I/O option module (4 digital IO, 3 Analog inputs, 1 analog output).
   b. SI -Ethernet (In the future there are plans to have a phone browser application to the Simplex Pump. This will use the SI-Ethernet Module.)
4. Key Pads
   a. Remote mountable LCD keypad, & CI 485 Adaptor (mounts external from the drive)
   b. Compact Interface (CI) keypad (Mounts on the drive)

2.3.1 Pump Drive with a CTVue panel

Control Techniques offers a HMI interface to the M400. The CtVue can be preloaded with software that interfaces to the Simplex Pump application in the M400. Refer to "M400 CTVue Simplex Pump User Manual", Part Number 401849-05.

2.4 Simplex Pump Preloaded Software

The M400 is preloaded with a Machine Control Studio (MCS) program that implements the Simplex pump. Additionally, the M400 parameters must be initialized to the desired settings. There are several ways to set the Menu parameters.

1. Enter values using the Key pad.
2. Load a saved parameter file using "M Connect" (A Control Techniques PC application).
3. Load the User Program and parameter file using an AI-Back-up Adaptor with these files in binary form loaded on a SD card.

The M400 drive parameters must be setup manually using "M Connect" software or from the drive keypad with the default values listed in Section 10.1. A copy of your settings can be saved in ether your PC with M Connect or in the SD card with an AI-Back-up Adaptor.

NOTE: Simplex Pump Machine Control Studio (MCS) software is Control Techniques proprietary. To load a binary file of the Simplex Pump user program you must use a SD card with AI-Back-up adaptor.

3 Feature Set

The M400 Simplex Pump Solutions drive incorporates several pumping specific control and diagnostic features that may be enabled or disabled depending on the application requirements. The following is a description of each attribute.

3.1 Pump Operating Modes

When HAND or AUTO modes are not selected the drive is inhibited.

3.1.1 HAND Mode

HAND mode is a manual user override, mainly used for maintenance. When HAND mode is selected the drive immediately starts and commands the motor to run at a parameter specified fixed frequency – "Hand Mode Speed Setting" (Pr 0.023 / Pr 1.021). The pressure feedback transducer, and flow switch inputs are not monitored and the PID loop has no effect on operation.

Warning

Use caution when in HAND mode. The Pump is set to run at a user defined speed. All the stops and the pump safety shut downs are bypassed.

3.1.2 AUTO Mode

In AUTO mode the drive starts, stops, and maintains a constant pressure with a varying demand. The pressure is monitored and the Motor speed is automatically adjusted using the drive PID controller. During AUTO mode the automatic safety shutdown features are enabled.

3.2 Options for Activating Auto and Hand modes

The Auto and Hand modes are activated by setting the drive inputs that are internally mapped to the Auto and Hand Input functions. Primarily this is from a hard wired switch (Auto-off-Hand) wired to terminals T12 and T13. If both inputs are active, Auto mode is selected.

3.2.1 Terminals

A keyed three position switch (Auto-off-Hand) provides the standard connection. By default Terminals T12 and T13 are mapped to the Auto select and Hand select input functions.

3.2.2 Keypad

For key pad selection of Auto and Hand modes see the trouble shooting section.

3.2.3 CTVue

The optional CTVue can also provide the Auto and Hand modes. When enabled to provide these signals, the CTVue software un-maps Terminal T12 and T13 and directly sets the Auto select and Hand select input functions.

3.3 AUTO Mode Automatic Start and Stop Conditions

In AUTO mode the drive starts, stops, and maintains a constant pressure with a varying demand. This section describes the start and stop conditions.

3.3.1 AUTO Start Condition

The motor starts (wakes) when the pressure transducer is below the "Low Pressure Setpoint"(Pr 0. 018 / Pr 30.013) after completion of a "Start Delay" (Pr 0. 019 / Pr 30.059). The start delay serves two purposes: 1) It filters the start condition. 2) It provides a cycle delay. The pump will remain off for this period.

If the transducer signal level rises above the "Low Pressure Setpoint" the timer will reset and the pump will not start. Setting "Start Delay" (Pr 0.019 /Pr 30.059) to 0 disables the Start Delay.

Note: The start times can be set to reduce over cycling on the pump.

3.3.2 AUTO Stop Conditions

In Auto mode and during times of low demand it may be desired to stop the pump motor and enter a "sleep" situation.

In Auto mode, the pump is monitored for stop conditions. The stop condition will ramp down to idle (zero speed) and then will monitor the pressure for the start condition. Upon a valid start condition the pump will restart. The motor stops on any of three conditions:

1. The pump speed is below the "Sleep Frequency" ((Pr 0.021 / Pr30.051) for the" Sleep delay"(Pr 0.022 / Pr 30.52). When the pump demand is low the increasing pressure will cause the PID controller output to set the motor speed low. At this low point, there is little to no flow and the pump will be idled. Setting the sleep delay to zero will disable this stop condition.
2. An optional Flow switch can be wired into the system. If this switch indicates no flow for the "NoFlowSwitchDelay"(Pr 30.060) then the pump will go into a idle condition. If the flow switch opens during this delay the timer will reset and the drive will remain active. Setting "NoFlowSwitchDelay" to 0 disables the Flow switch.

3. Software No flow is an algorithm to detect no flow. This is to cover the cases where there is no flow but the PID controller continues to set the motor speed above the sleep threshold. It may be a case of leaky pipes. For those systems, the Software No Flow can be enabled and used as a pump stop. See Software No Flo, section3.4.7 for more details.

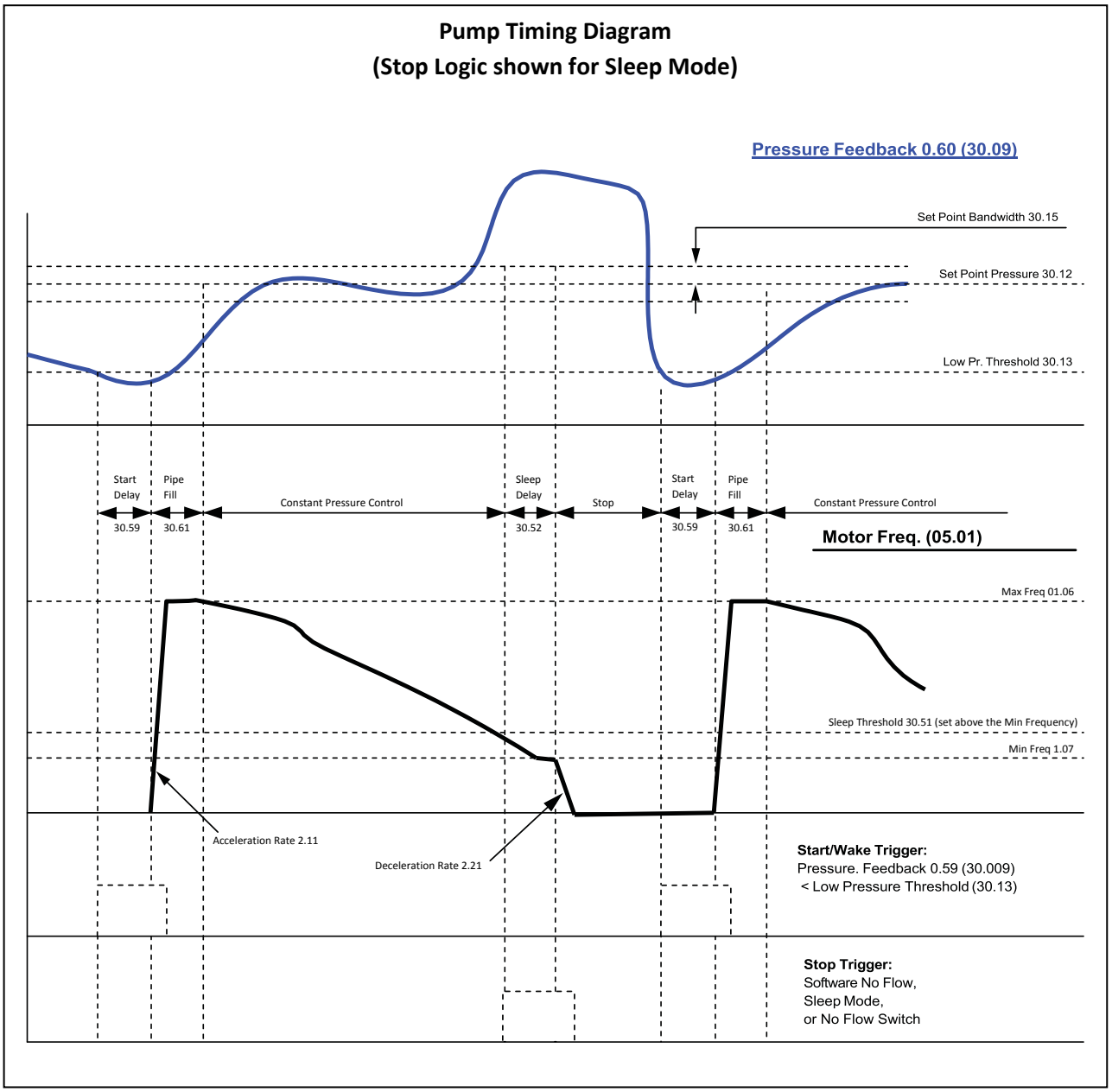
Pump Timing Diagram
(Stop Logic shown for Sleep Mode)
Pressure Feedback 0.60 (30.09)
Set Point Bandwidth 30.15
Set Point Pressure 30.12
Low Pr. Threshold 30.13
Start Delay
Pipe Fill
Constant Pressure Control
Sleep Delay
Stop
Start Delay
Pipe Fill
Constant Pressure Control
30.59
30.61
30.52
30.59
30.61
Motor Freq. (05.01)
Max Freq 01.06
Sleep Threshold 30.51 (set above the Min Frequency)
Min Freq 1.07
Acceleration Rate 2.11
Deceleration Rate 2.21
Start/Wake Trigger:
Pressure. Feedback 0.59 (30.009)
< Low Pressure Threshold (30.13)
Stop Trigger:
Software No Flow,
Sleep Mode,
or No Flow Switch

3.4 Simplex Pump Operating Features

3.4.1 Pressure PID

While in Auto mode, the system water pressure is maintained by the drive using an adjustable gain PID control loop with a 4-20 mA pressure transducer as feedback. The user will enter the pressure setpoint in PSI units with 0.1 resolution (Pr 30.030). The feedback transducer can be scaled into PSI units using (Pr 0.14 /Pr 30.023) and . (Pr 0.13 /Pr 30.022)

3.4.2 Low Suction Detection/Dry Well

While in Auto mode, the drive is monitored for high speed and low load. This indicates air in the system, a dry well. The response actions for Dry Well are: 1) No action, 2) Trip the drive (Tr 84) 3) Limit the motor speed until the pump has a load.

In detail, the Dry Well function monitors the Drive Torque (Pr 4.020) for being below the "Speed / Torque Low Load Point" (Pr 30.063) while within "Max Frequency Bandwidth"(Pr 30.057) for the duration of "Dry Well Detection Delay" (Pr 30.062). If true, a Dry Well is detected. Based on "DryWellModeSelection"(Pr 30.018) the drive is either takes no action, trips (tr84) or the PID output is limited(Pr 14.013) by "LowSuctionFreqDecrement" (Pr 30.064).

3.4.3 Transducer Loss Detection

The system will monitor the 4-20 mA pressure transducer and if the signal is below 4 mA the system will act as follows depending on "Pressure Transducer Loss Action"(Pr 0.015 / Pr 30.017):

1) Ignore the detection,

2) Trip the drive (Tr 81)

3) The motor will run at a fixed speed as specified by "Transducer Loss Speed setting" (Pr 1.27).

If the Fixed speed option is selected, the system will run with reduced capabilities. The transducer is no longer available and becomes a fixed zero output. The following list describes how the Pump features operate with a fixed speed:

PID Pressure control – No longer available, running at a fixed speed.
Start control – Start immediately, after start time lapses.
Stop control – Only if a flow Switch is installed, and selected. Otherwise pump runs continually.
Pipe Fill – disabled.
Under Pressure protection – disabled.
Over pressure detection – effectively disabled, as pressure will always read zero.
Software No Flow detection – disabled.
Dry Well – Still runs, only when Dry well is detected, the motor will run at max speed minus the percentage cap.

3.4.4 High Pressure Detect

There are separate parameters available for setting a high pressure warning alarm limit and a high pressure trip limit. If the actual system pressure exceeds the alarm setting in Pr 30.020 a digital output will be set. If the pressure exceeds the fault setting in Pr 30.021 the system will generate a trip. Setting these parameters to 0 disables those functions.

3.4.5 Under Pressure Detect

"Under Pressure Mode" (Pr 30.050) is used to select the detection modes for under pressure:

0 -Setpoint, Use Below Pressure setpoint Bandwidth (Pr 30.012 – Pr 30.015)

1- Level. Use "Under Pressure Setpoint " (Pr 30.014)

The system pressure is monitored while the drive is running at maximum speed (Pr 1.006 – Pr 30.057). If the pressure is lower than the selected detect mode for the amount of time specified by "Under Pressure Delay" (Pr 30.058) the system will generate a trip (Tr 83). Setting the "Under Pressure Delay" (Pr 30.058) to 0 disables Under Pressure Detect.

3.4.6 Automatic Fault Reset

The system has the capability of automatically resetting trip conditions. A setting in Pr 10.034 allows the user to specify the number of reset attempts from 0 to 6 times. A setting of 0 disables the function. Pr 10.035 defines the time delay between the trip and the auto reset attempt. If the number of accumulated reset attempts reaches the value in Pr 10.034 no further reset attempts will be made. The reset attempt accumulation counter is reset to zero if no faults occur for 5 minutes, or if a manual reset is performed.

3.4.7 Software No Flow Detection

The Simplex Pump application has a software algorithm to detect No Flow without a flow switch. It goes through a series of tests to determine no flow, but the basic premise is to lower the pressure set point which causes a lower motor speed. The pressure will track to the new set point only if there is flow. If "Software No Flow" is detected the response is to sleep the drive.

For No flow the system goes through 3 steps to detect No Flow.

1) It monitors the motor frequency and if it is below the "No Flow Freq Setpoint" (Pr 30.054) No Flow condition 1 is met.
2) It monitors the motor frequency and if it is within "No Flow Freq Setpoint"(Pr 30.054) +/- "No Flow Freq bandwidth"(Pr 30.053) for the period of time set in "No Flow Constant Freq Delay" (Pr 30.056) the "No Flow" condition 2 is met.
3) At this point the pressure set point is reduced by "Pressure Setpoint Decrement"(Pr 30.027). After a "NoFlow Stabilizing Delay" (Pr 30.055), the "Pressure At Setpoint" (Pr 30.043) signal is checked to see if the pressure tracked the Pressure reduction. If pressure did not track, a No Flow is detected. If it did, the original setpoint will be restored.

3.4.8 Multiple Setpoint Selection

The system can store 4 separate pressure setpoints. Any of the 4 can be selected as the active setpoint via a binary pattern on two digital inputs (Pr 30.036) and (Pr 30.037). If neither of the inputs is turned on, the main setpoint value in (Pr 0.32 /Pr 30.30) is selected.

3.4.9 Pipe Fill

The purpose of Pipe Fill is to run the motor at a constant speed for a fixed duration to remove all the air in the lines. Air in the lines will interfere with the pressure feedback.

The Pipe Fill feature gives the user an option of running the motor at specified speed (Pr 1.026) for a specified amount of time(Pr 30.061) when the drive starts running in Auto mode. When the timer has expired the drive will begin PID control. Setting a time value in Pr 30.061 will activate the feature, while a setting of 0 disables it. The No Flow, Under Pressure, and Dry Well detection will not be activated until the Pipe Fill timer has elapsed.

"PipeFillMaxPressure" (PR 30.029) can be used to signal completion of the Pipe fill operation. A 0 entry disables this feature. If enabled and during the "Pipe Fill Time"(Pr30.061), the pipe fill will complete upon detection the feedback pressure over the "PipeFillMaxPressure".

Note: If using the "PipeFillMaxPressure" insure that you have set the motor speed high enough to produce that pressure.

Warning

Use caution when activating the pipe fill feature. The pressure transducer is ignored which may cause an over pressure condition if the time value is too long. When using this feature it is highly recommended to enable the over pressure fault detection.

4 Mechanical Installation

See User Guide Unidrive M400 Part Number 0478-004-xx.

5 Electrical Installation

See User Guide Unidrive M400 Part Number 0478-004-xx.

Refer to the Unidrive M400 User guide for proper mechanical and electrical installation of the drive. If using the SI-I/ O option module refer to the SI-I/O User Guide for installation instructions.

5.1 Electric Control Wiring

All digital inputs on the M400 are positive logic only, meaning that connecting +24 Vdc to the input terminal will turn the input ON. Terminal T9 provides 100 mA at +24 Vdc.

All analog inputs on the M400 are unipolar only.

Detailed specifications for the I/O are listed in the M400 manuals.

5.1.1 Available Simplex Pump Input and Out functions

The Simplex Pump Software has Input and output functions that are assigned Drive Menu Parameters. The Input functions are activated when their Drive Menu Parameter is set. Output function set their Drive Menu Parameter. To activate Input functions or see Output function results these function are mapped to the digital input or outputs.

Alternately the Input functions and output functions maybe accessed through the RS485 port. HMI control panels use the RS485 port access.

Available Pump Input Functions

Available Pump Input Functions	Menu Parameter
Drive Reset	Pr 10.033
AUTO Mode Select Input	Pr 30.031
HAND Mode Select Input	Pr 30.032
No Flow Switch Input	Pr 30.034
Clear Gallons Count	Pr 30.035
Pressure Set point Select 1 Input	Pr 30.036
Pressure Set point Select 1 Input	Pr 30.037
Pump Fault Input	Pr 30.038
Over Temperature Fault Input	Pr 30.039

Available Pump Output Functions

Available Pump Output Functions	Menu Parameter
Pipe Fill Done Output	Pr 30.033
System Ready Output	Pr 30.040
Over Pressure Alarm Output	Pr 30.041
Within Frequency Bandwidth Output	Pr 30.042
Pressure At Reference Output	Pr 30.043
Loss Of Transducer Output	Pr 30.044
Running In Auto Output	Pr 30.045
Dry Well Low Suction Output	Pr 30.046
Auto Mode Selected Output	Pr 30.047
Hand Mode Selected Output	Pr 30.048
Under Pressure Fault Output	Pr 30.049

Available M400 Output Functions

Available Pump Output Functions	Menu Parameter
Drive Healthy (No Trips)	Pr 10.001
Drive Active	Pr 10.002
Zero Frequency (motor stopped)	Pr 10.003
Rated Load Reached	Pr 10.008
Current Limit Active	Pr 10.009

5.1.2 M400 Control Terminal Connections

Control Connector

Term	M400 Function	Default Pump Function	Mapping
T1	0V Common	Pressure Transducer Common	
T2	Analog Input 1	Pressure Transducer Input	Pr 07.010=1.036
T3	n/a		
T4	+10 Vdc Analog supply		
T5	Analog Input 2	N/A	Pr 07.014=0
T6	0V Common		
T7	Analog Output 1	N/A	Pr 07.019=0
T8	Analog Output 2	N/A	Pr 07.022=0
T9	+24 Vdc Output		
T10	Digital I/O 1	N/A	Pr 08.021=0
T11	Digital I/O 2	N/A	Pr 08.022=0
T12	Digital Input 3	AUTO Mode Select Input	Pr 08.023=30.031
T13	Digital Input 4	HAND Mode Select Input	Pr 08.024=30.032
T14	Digital Input 5	Flow Switch Input - Closed = No Flow	Pr 08.025=30.034
T15	Digital Input 6	Gallons per minute flow meter (only on T15)	Pr 08.026=0
T16	Digital Input 7	N/A	Pr 08.027=0
T17	+24V	N/A	

Safe Torque connector frame size (1 to 4)

Term	M400 Function
T31	Safe Torque Off 1 Input
T32	Safe Torque Off 1 OV
T33	Safe Torque Off 2 OV
T34	Safe Torque Off 2 Input

Safe Torque connector frame size (5 to 6)

Term	M400 Function
T31	Safe Torque Off 1 Input
T32	Safe Torque Off 1 OV
T35	Safe Torque Off 2 Input
T36	Safe Torque Off 2 0V

Relay Connector

Term	M400 Function	Default Pump Function	Mapping
T41	Relay 1	Relay – Drive Healthy	Pr 08.028=10.001
T42	Relay-1	Relay - Drive Healthy	

5.1.3 SI-I/O Option Module

5.1.4 Pump Drive with a SI-I/O Option Module

Adding a suffix -PL with any M400 drive, specifies a pump drive along with an SI-I/O module. With this option, additional I/O allows access to more I/O functions. By default the SI I/O is configured to the table below. The "SI I/O" pins are are user configurable to any of the Simplex Pump I/O functions..

See SI-I/O User guide for details.

Term	SI I/O Function	Pump Function
PL1 (Plug 1)		
T1	0V common	0 V
T2	Digital Input/Output 1	Multi Setpoint Select 1 Input
T3	Digital Input/Output 2	Multi Setpoint Select 2 Input
T4	Digital Input/Output 3	Fault Reset Input - Close to Reset
T5	Digital Input/Output 4	Over Temperature Switch Input - Close to Trip
T6	0V common	0 V
T7	Analog Input 1 / Digital input 5	
T8	Analog Input 2 / Digital input 6	
T9	Analog Input 3 / Digital input 7	
T10	0V common	0 V
T11	Analog Output 3 / Digital input 8	
PL2 (Plug 2)		
T21	Relay 1	Relay - Alarm
T22	Relay common	Relay - Alarm
T23	Relay 2	

5.1.5 Typical System Wiring Diagram

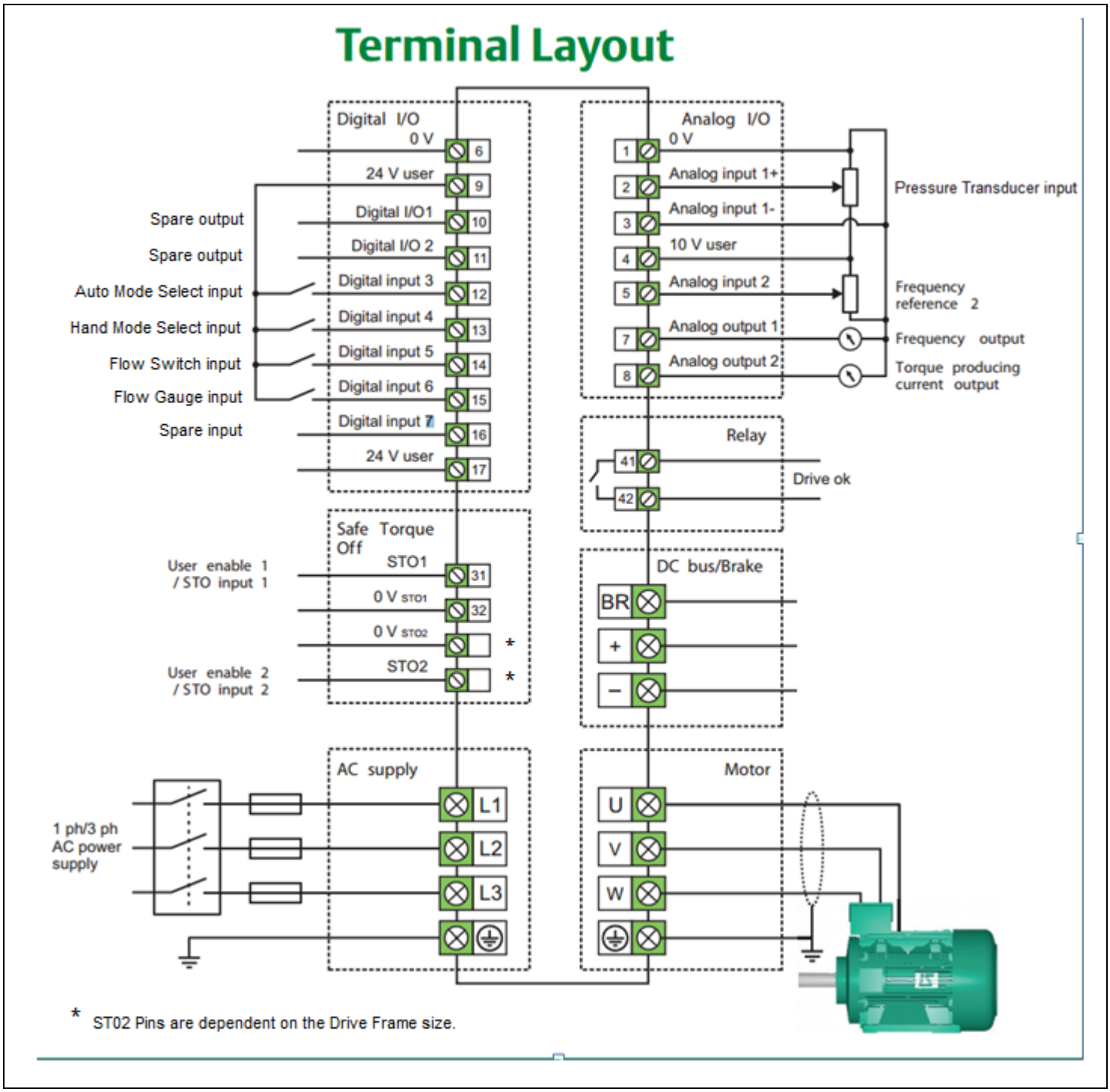

5.1.6 Flow Gauge - Wiring

The flow gauge is optional. The M400 Terminal 15 [Input 6] supports a pulse input. The M400 counts and pulses and does a frequency calculation. The Simplex pump firmware will scale the pulse count and the detected Frequency into gallons and Gallons per minute. These values can be read by a HMI interface for from the Keypad.

5.1.6.1 Creative Sensor Technology FSI-T10, FSI-T15, FSI-T20, FSI-S40

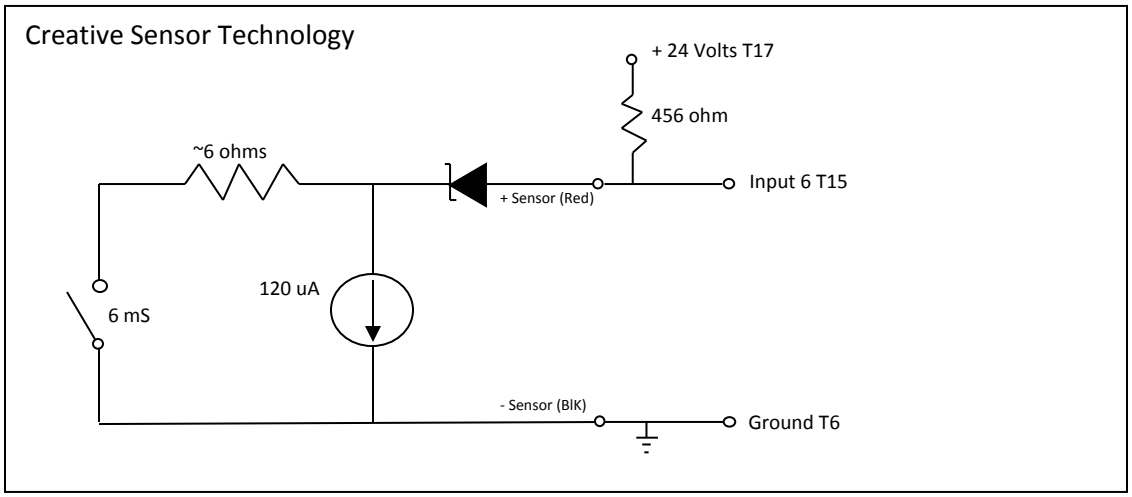

6 Getting Started – Set up your Pump

This section provides the steps to take to site commission a simplex pump. For more descriptions on the pump operation see the "Simplex Pump Operation section". For more details on each parameter see the "Parameter Description section".

Menu 0 is references the Simplex Pump parameters in the order recommended for pump setup. See Function diagrams section, Diagram #16.

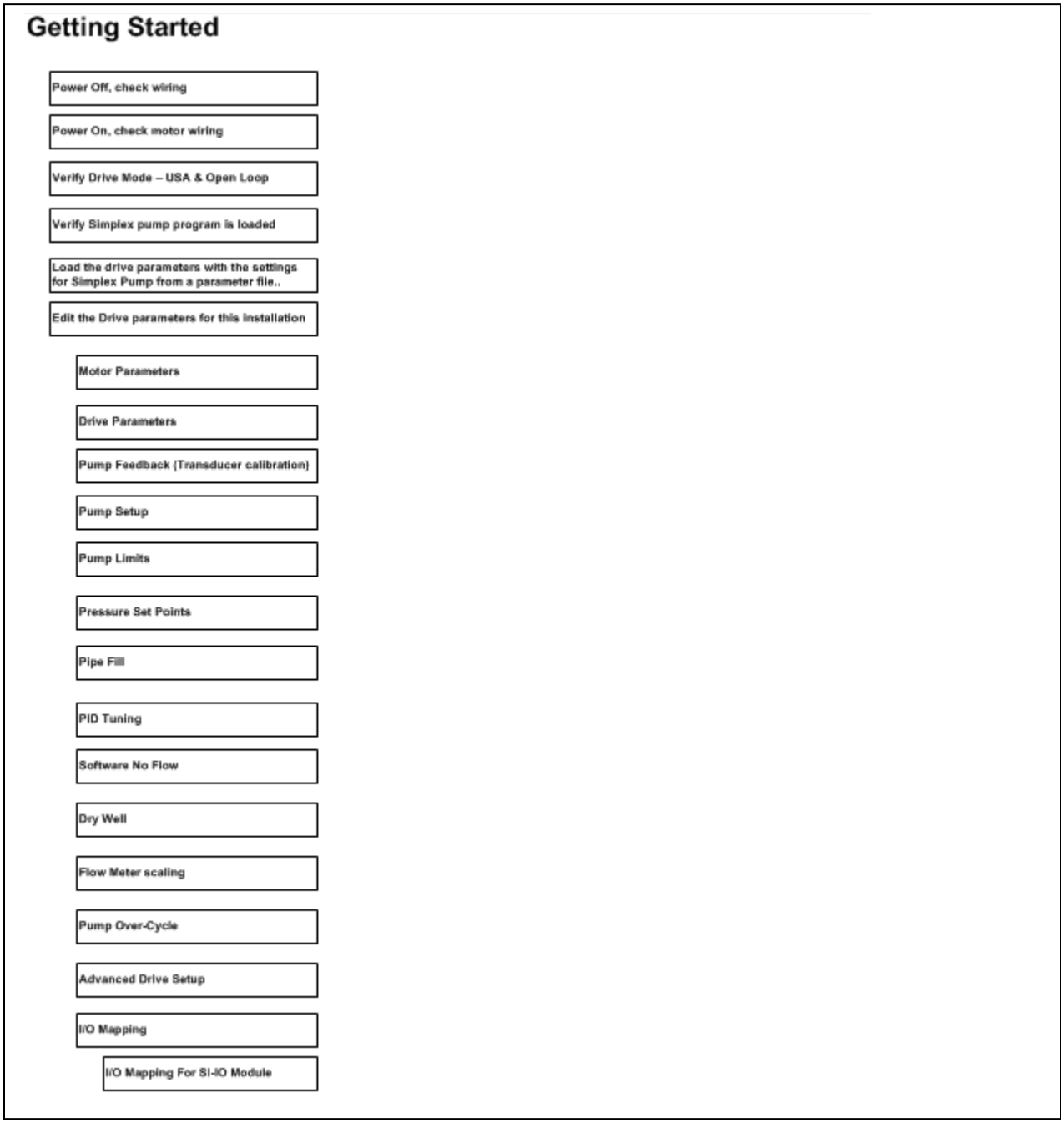

6.1 Pre-Check start:

Check service wire and breaker size (external of cabinet) to make sure it is adequate.

Insure the STO (Safe Torque off) is wired.

6.2 With Power off:

The following is a circuit that is part of the cabinet. If a remote E-Stop is not used install a jumper across 101 & 203 in the cabin jumper across 101 & 203 in the cabinet.

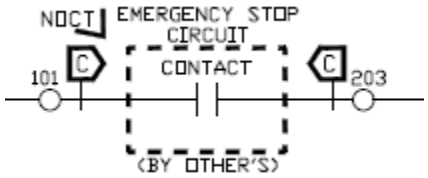

If a self-powered Transducer is used it must be wired up across T17 (+24 volts) & T2 (Analog 1 Input)

Perform a ground check on the system: Gnd to L1, L2, L3, U, V, and W. There should be no shorts to ground.

6.3 With Power On Verify & Motor Wiring:

With the door mounted selector switch in the "OFF" position power up the drive.

Check voltage from phase to phase (A-B, B-C, and A-C)

Check voltage from Phase to Ground (A-GND, B-GND, and C-GND)

Perform the same voltage checks under a load condition after the drive has been set up

Check the motor rotation. Turn H-O-A Switch into the Hand position, and drive should run at the speed you have entered into 0.18 (Note: 0.18 must be greater or equal to what you have entered into 0.1). Check rotation of the pump motor and if it needs to be reversed just shut off power to the drive and swap any two motor leads.

6.4 Verify M400 Drive Mode:

Verify Pr 11.046 = 1244 USA defaults. (can be set with Pr 0.000 = 1244)

Verify Pr 11.031 = 1 Open loop

Verify Pr 11.034 = 0 AV mode

6.5 Verify M400 Simplex Pump program is loaded:

The M400 Simplex Pump Solutions drive is shipped from the factory with the Simplex Pump Program and the default pump parameters loaded. Apply power to the drive and verify that the pump specific parameter values match the default settings listed in Section 11.2.2.

A quick check is to verify that the custom Menus (Menu 30) are available.

Verify that Pr 30.003 the Software version is correct. Setting this version to zero will execute the internal pump set to defaults. The Initialization will set the version number and NVM save that value, so initialization will not run on power cycle.

A more detail verification which be to match the menu parameters with those listed in Section 10.

The best way to restore the user program is to use the AI-Backup adaptor and an SD card programmed with the M400 Simplex Pump Program.

6.6 Load the M400 Simplex Pump Parameters

KeyPad

AI-Backup

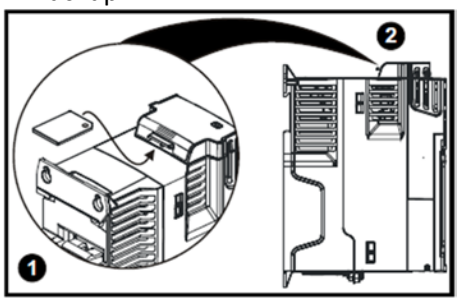

CTVue

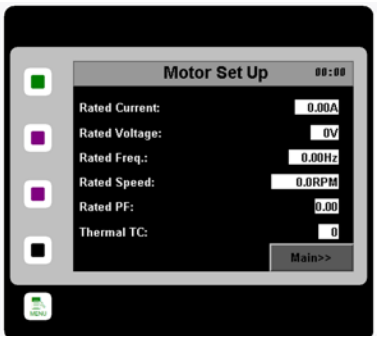

M400 Simplex Pump Parameters

Note: Pump Defaults are set when the Pump Version (Pr 30.003) is set to zero. The simplex pump application will then write the pump defaults. This action is automatically taken if you set Pr 00.000 = 1244. This provides a base from which to create parameter files that match your system needs. The loading of parameter files afterwards by any of these methods will overwrite those defaults.

Several parameters must be set prior to running the M400 Simplex Pump Solutions drive system. The drive may be commissioned by entering parameters with any of the following methods:

1. Use the drive's keypad to hand enter the required settings. These can be entered using menu 0 or the advanced menus. Menu 0 references the Advanced Menus, so that setting Menu 0 values end up setting their mapped Advanced Menu entry. Menu 0 entries are automatically NVM saved, while Advanced Menu entries will require a manual save (Pr 00.000 = 1001, then press the red reset). However, not all of the parameters are available in Menu 0.

To access the Advanced Menus (M01 to M30) you must have the correct security accesses set.

Pr 11.030	User Security Code
Pr 11.044	User Security Status (Pr 0.010)

Some parameters should be set first, because they reset parameters to defaults.

Pr 11.031	User Drive Mode
Pr 11.034	Drive Configuration

After setting the values, do a manual NVM save and reset the drive.

For more information on mapping, refer to M400 User Guide.

2. The pump parameters can also be programmed by downloading a parameter file using "UniDrive M Connect" configuration software. Use a personal computer with "UniDrive M Connect" configuration software and a CT communication cable connected to the standard RTU serial port. Cable order code is CT-USB-CABLE.

"UniDrive M Connect" has the capability to upload and save parameter files. These parameter files can then be downloaded. Parameter files

At this time, "UniDrive M Connect" only has limited support the Custom Menus (M30) of the M400. It supports Custom Menu in parameter files, but as no way to show Menu 30 in its views. To change Menu 30 values you need to use the keypad.

Note: A Parameter file holds all the menu parameter data of a drive, not just those that apply the Simplex Pump Application.

Note: Parameter files are created with "UniDrive M Connect". The format they are saved in is a text based XML, so if you are careful, they could be hand edited.

Note: There are many other parameters available in the UniDrive M 400 drive and information on those can be obtained from the UniDrive M 400 User Guide.

3. Parameters can be loaded using the AI-Back-up Adaptor and a SD card. See “Backing up the Set-up Parameters”. Use the AI-Back-up Adaptor Port adaptor that allows the drive to use an SD card for parameter cloning and an input for 24V back-up. Unidrive M400 uses popular SD cards for quick and easy parameter and program storage using the AI-Back-up Adaptor. SD cards provide a huge memory capability allowing a complete system reload if required and can be easily pre-programmed on a common PC.

4. Use the CTVue programmed for M400 Simplex pump to enter the Parameters.

5. Future SI-Ethernet module with Web page access to the Simplex Pump application.

It is highly recommended to first become familiar with the commissioning method selected before proceeding to the set up steps.

6.7 Set Up – Loading the Parameters

Ensure that all digital inputs are off before applying power to the drive or changing any parameters. Follow the steps below for the initial setting of the drive:

6.7.1 Motor Set Up

Parameter	Description	Units	Range	Drive Default	Pump Default
Pr 05.007 (Pr 0.006)	Rated Current (FLA Full Load Current)	Amps	0.00 to Drive Rating	0.00	-
Pr 05.009 (Pr 0.008)	Rated Voltage	-	0 - 240 V, 0 - 480 V,0 - 575 V, 0 - 690 V	Depends on the drive model	-
Pr 05.006 (Pr 0.005)	Rated Frequency	Hz	0 to 550.00	0.00	-
Pr 05.008 (Pr 0.007)	Rated Speed at full load (Set to 0, so no slip compensation is enabled).	RPM	0-9999	1800	-
Pr 05.010 (Pr 0.009)	Rated Power Factor (if unknown leave at default of .85)	-	0 -1.00	0.85	-
Pr 05.011	Motor Poles	-	0- 16	0	-
Pr 04.015	Thermal Time Constant	s	1 to 3000	179	-

1. Insure that the motor parameters correctly match your motor data plate.

   Note: “Unidrive M Connect” supports defining motor parameter sets by Motor Model number.

6.7.2 Drive Set Up

Parameter	Description	Units	Range	Drive Default	Pump Default
Pr 1.006 (Pr 0.002)	Maximum Reference Clamp	Hz	0 to 550.00	60.00	60.00
1.007 (Pr 0.001)	Minimum Reference Clamp	Hz	-550.00 to 0	0.00	0.00
2.011 (Pr 0.003)	Acceleration	s	0.0 to 3200.0	5.0	5.0
2.013 (Pr 0.004)	Deceleration	s	0.0 to 3200.0	10.0	10.0

1. Set the maximum motor speed in Hz for your system. This most likely will be the rated frequency for the motor and drive. The motor is the most efficient at it rated speed. Set Pr 01.006 with this value.
2. Set the minimum motor speed in Hz for your system. This is the minimum running speed of the motor. Set Pr 01.007 with this value. If your pump has a thrust bearing you will want to insure that the min speed and acceleration supports that bearing.
3. Set the desired Acceleration(Pr 2.011) and Deceleration rate(Pr 2.021)

6.7.3 Pump Feedback (Transducer calibration)

Parameter	Description	Units	Range	Drive Default	Pump Default
Pr 11.047 (Pr 0.054)	OnBoard User Program Enable (Drive power up sets to run)	-	0: stop 1: Run	Run	Run
Pr 07.001	Analog 1 Input		-100.00 to 100.00	RO	RO
Pr 07.007 (Pr 0.012)	Analog 1 Input Mode	-	0 to 6	6: Volts	4 4 to20ma
Pr 30.022 (Pr 0.013)	Minimum Pressure Feedback Scaling	PSI	0 – 6553.5	0.0	0.0
Pr 30.023 (Pr 0.014)	Maximum Pressure Feedback Scaling	PSI	0 – 6553.5	145.0	145.0
Pr 30.017 (Pr 0.015)	Feedback loss action	-	0: Disabled 1: Trip (tr 81) 2: Run @ Pr 1.027	1	1
Pr 1.027 (Pr 0.016)	Transducer Loss frequency	Hz	0 to Pr 1.006	0.00	40.0
Pr 12.010	Variable Selector Mode	-	0: Pass thru 6: Time Const	0	6
Pr.12.015 (Pr 0.017)	Transducer Filter	sec	0.00 to 100.00	0.00	1.00

1. Ensure the pump program is running by setting (Pr 11.047) = 1. The pump program initialization is run after setting Pr 30.003 to zero.
2. Set the Analog Mode(Pr 07.007) to match your transducer. Check to see if the signal is present (Pr 07.001). For transducer loss detection use 4 to 20ma or 20 to 4 ma transducers.

3. Scale the pressure transducer feedback signal connected to M400 analog input terminal T1 & T2. Set the minimum and maximum pressure values with Pr 30.022 and Pr 30.023 respectively.
4. Determine what action you wish to take if the transducer fails.
   0 = Disabled (Ignore fault)
   1 = Fault Drive (Trip Code t081)
   2 = Run at Fixed Speed set in parameter 1.27)
5. If you choose to run on transducer loss set the desired Motor speed reference (Pr. 1.027)
6. If you have a noisy Transducer, you can add a time constant filter by Pr 12.010=6 and Pr 12.015 to the desired time constant. To disable the filter set Pr 12.010=0.

CAUTION

Care must be taken when setting "Transducer loss Frequency (motor speed) because the system can over pressure. This is compounded because the Over Pressure Fault detection in Pr 30.021 relies on the transducer so it is effectively disabled. The Software No Flow algorithm also uses the transducer so it is disabled. It is recommended to Trip on transducer loss. Then manually run the pump in Hand mode. If you need use the Transducer Loss Frequency then a No Flow sensor redundant to the transducer is recommended.

6.7.3.1 Transducer Calibration

The Simplex Pump program must know the pressure range of the transducer. The minimum and maximum pressure is entered in the parameters listed below. Pr 7.007 (sets up analog input #1 (T2) for a 4-20 mA or 0 Vdc to 10 Vdc signal.

Speed can be varied in HAND mode by changing a pump preset reference (Pr 0.023 /Pr 1.021). This can be used to calibrate the pressure transducer signal by running at a speed and comparing a calibrated pressure signal to (Pr 30.009) (PSI).

Pr 30.022 and Pr 30.023 set the minimum and maximum range of the pressure transducers.

4-20 mA signal. This range can be obtained from the transducer nameplate and adjusted to suit actual pressure measurement from calibrated meter/gauge.

NOTE: There is NO AUTOMATIC PRESSURE CONTROL in HAND mode.

Parameter	Description	Units	Range	Drive Default	Pump Default
Pr 7.007 (Pr 0.012)	Analog Input 1 Mode	-	4: 4-20mA 6: Voltage	6	4
Pr 30.009 (Pr 0.059)	Pressure Feedback Value(RO)	PSI	0 to 6553.5	-	-
Pr 30.022 (Pr 0.013)	Minimum Feedback Scaling	PSI	0 to 6553.5	0.0	0.0
Pr 30.023 (Pr 0.014)	Maximum Feedback Scaling	PSI	0 to 6553.5	145.0	145.0

See Function diagrams section, Diagram #2.

6.7.4 Pump Set Up

Parameter	Description	Units	Range	Drive Default	Pump Default
Pr 30.013 (Pr 0.018)	Low Pressure Setpoint (also called the "Wake Pressure")	PSI	0 – 6553.5	0.0	30.0
Pr 30.059 (Pr 0.019)	Start Delay Time	Sec	0 – 6553.5	0.0	5.0
Pr 30.060 (Pr 0.020)	No Flow Switch Delay Time	Sec	0 – 6553.5	5.0	5.0
Pr 30.051 (Pr 0.021)	Sleep Frequency	Hz	0 – 655.35	0.00	35.0
Pr 30.052 (Pr 0.022)	Sleep Delay Time	Sec	0 – 6553.5	0.0	30.0
1.021 (Pr 0.023)	HAND Mode Speed (Frequency) Setpoint	Hz	+/- 1500.00	0.00	58.0
Pr 30.004 (Pr 0.024)	GPM Low stop	gpm	0 3276.7	1.0	1.0
Pr 30.005 (Pr 0.025)	GPM Low Stop Delay (0 disables)	Sec	0 – 6553.5	0.0	0.0

1. The Simplex Pump system will start when the pressure drops below the threshold set in "Low Pressure Setpoint" (Pr 0.018 / Pr 30.013).

   The event that drops the pressure should be a valve opening from an all closed valve condition. The water system should have a pneumatic reservoir to allow pressure retention after the water flow has ceased and the pump stopped. The pressure charge should remain until a vave is opened and the flow starts. This will keep the pump from prematurely starting.

   Note: Insure this is above the "Under Pressure" limits, if set.
2. Set the start delay time (Pr 0.019 /Pr 30.059). This is the Time to filter the low pressure start condition.
3. Set the "No Flow Switch Delay Time" (Pr 0.020 / Pr 30.060). This is a filter for the No Flow switch. If not using a No Flow switch set this to zero to disable the switch.
4. Sleep is the common pump stop is to detect a low pump speed. If the motor speed drops below "Minimum Sleep Speed" / Freq"(Pr 0.021 / Pr 30.051), the motor is commanded to stop.

   The PID controller is commanding the motor speed based on the flow demand which is reflected by the pressure feedback. When there is no flow demand, the PID controller will run the motor at the minimum speed. The "Minimum Sleep Speed" / Freq"(Pr 0.021 / Pr 30.051) should be set above this minimum speed. Minimum speed should be set to drive the pressure up when no flow but also not too high to cause any damage. So Minimum speed is set to 50 to 80% of speed. Pressure is relative to Frequency squared. A 40% drop in pressure matches as 20% drop in speed. Pressure is proportional to flow squared.

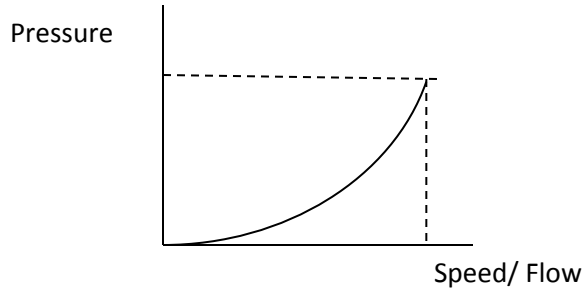

Note: Insure Sleep speed is above the "Min Motor speed".
Note: In a leaky system the pressure may not hold, and the PID will demand a motor speed above the Sleep Frequency. If this is the case you may want to enable the Software No Flow detection.

5. Set the "Sleep Delay Time" (Pr 0.022 / Pr 30.052). This is a filter on the motor speed reference. The motor speed must remain below the sleep speed for this duration.
6. Set the desired HAND speed in (Pr 0.023 / Pr 1.021). A 58 Hz value is close to full speed, and the unique value is good for indicating the pump is running in Hand Mode.
7. The flow gauge is optional. If you have a flow gauge and want a low flow stop condition. Enter the Low flow values.

Pr	Function	Range	Units	Default	Type
Pr 30.015 (Pr 0.034)	Pressure Setpoint Bandwidth	0 to 25.5	PSI	5.0	RW

6.7.5 Pump Limits

Parameter	Description	Units	Range	Drive Default	Pump Default
Pr 30.020 (Pr 0.026)	Over Pressure Alarm Level	PSI	0 – 6553.5	0.0	95.0
Pr 30.021 (Pr 0.027)	Over Pressure Trip Level	PSI	0 – 6553.5	0.0	100.0
Pr 30.057 (Pr 0.028)	Max Freq Band Width	Hz	0 – 655.35	1.00	5.00
Pr 30.058 (Pr 0.029)	Under Pressure Delay	Sec	0 – 6553.5	0.0	60.0
Pr 30.050 (Pr 0.030)	Under Pressure Mode	-	0 – Setpoint 1 - Level	0	1
Pr 30.014 (Pr 0.031)	Under Pressure Set Point	PSI	0 – 6553.5	0.0	20.0
Pr 30.015 (Pr 0.034)	Pressure Setpoint Bandwidth	PSI	0 to 25.5	5.0	5.0

1. **OverPressure** In AUTO mode, when the pump pressure 30.009 (0.059) is at or above the alarm level (parameter 30.020) and stays within 95% of this level, an over pressure alarm is flagged (parameter 30.041). When the pump pressure is equal to or above the trip level (parameter 30.021), the drive will trip with a trip code t082.

In the Auto mode the drive can detect two over pressure levels. The first (set by parameter **#30.020**) is used to set an alarm if the pressure stays at 95% of that level (a flag is set,**#30.041**) which can be used for a digital output or relay output to indicate this alarm. The second, set by parameter **#30.021**, will cause the drive to trip, displaying a t082 code on the drive display.

2. **Under Pressure** There are 2 configurations available:

   30.050 = 0 Bandwidth

   When the actual pressure 30.09 (0.059) is below the Pressure Final Set point 30.012 (0.061) minus the setpoint bandwidth 30.015(0.034)) and the motor frequency is within maximum frequency bandwidth (01.006 – 30.057) for a duration more than Under Pressure Detect Time (parameter 30.058), the pump drive is tripped with a trip code t083.

   30.050 = 1 Level

   When the actual pressure 30.09 (0.059) is below the Under pressure Set Point 30.014 (0.031) and the motor frequency is within maximum frequency bandwidth (01.006 – 30.057) for a duration more than Under Pressure Detect Time (parameter 30.058), the pump drive is tripped with a trip code t083.

   See Function diagrams section, Diagram #13.

6.7.6 Pressure Set Points

Parameter	Description	Units	Range	Drive Default	Pump Default
Pr 30.030 (Pr 0.032)	Main Pressure Set Point	PSI	0 – 6553.5	0.0	80.0
Pr 30.024 (Pr 0.033)	Alternate Pressure Setpoint 1	PSI	0 – 6553.5	0.0	0.0
Pr 30.025	Alternate Pressure Setpoint 2	PSI	0 – 6553.5	0.0	0.0
Pr 30.026	Alternate Pressure Setpoint 3	PSI	0 – 6553.5	0.0	0.0
Pr 30.015 (Pr 0.034)	Pressure Set Point Band Width	PSI	0 25.5	0.5	1.0

1. Alternate set points are optional. The four setpoints can be selected with external I/O to Pr 30.036 and Pr 30.037. The SI-I/O module has I/O terminals defaulted to these two input functions.

See Function diagrams section, Diagram #4.

6.7.7 Pipe Fill

Parameter	Description	Units	Range	Drive Default	Pump Default
Pr 1.026 (Pr 0.035)	Pipe Fill Speed	Hz	0 – Pr 1.006	0.00 Hz	
Pr 30.061 (Pr 0.036)	Pipe Fill Delay (0 disables)	sec	0 – 6553.5	0 sec	
Pr 30.029 (Pr 0.037)	Pipe Fill Max Pressure (0 disables)	PSI	0 – 6553.5	0.0	50.0

This feature is designed to remove air from the pipe at the start of the pump operation in AUTO mode. The pump will run at the “Pipe Fill Speed”(Pr 1.026) speed for a duration set by Pipe Fill Time (Pr 30.061)

after which the PID control will start. If the Pipe fill Max pressure is set, the pipe fill will complete early if that pressure is met. If the pressure is not met the pipe fill will complete on the pipe fill delay.

See Function diagrams section, Diagram #5.

6.7.8 PID Tuning

Parameter	Description	Units	Range	Drive Default	Pump Default
Pr 14.010 (Pr 0.038)	Kp (Proportional Gain)	-	0 to 4.000	1.000	1.000
Pr 14.011 (Pr 0.039)	Ki (Integral Gain)	-	0 to 4.000	0.500	0.500
Pr 14.012 (Pr 0.040)	Kd (Derivative Gain)	-	0 to 4.000	0.000	0.000

The built in PID Controller within the pump drive regulates the pump pressure depending on the setpoint. The proportional (Pr 14.010) and Integral (Pr 14.011) gains may require adjusting to obtain the response required; however the default values are suitable for most systems.

A basic start point to tune the PID:

Start with the "Ki" set to zero.

Start pump and establish a steady state condition where the pressure is holding for a given speed.

Monitor the Pressure feedback and increase the "Kp" (Proportional gain) until the Pressure feedback is unstable (oscillates). Then back off the gain until the pressure feedback is stable.

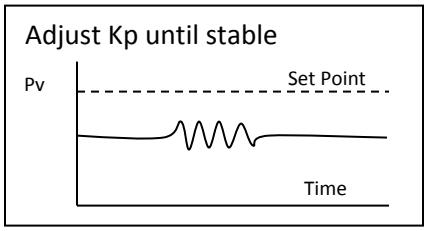

Kp increased until unstable, then reduce Kp until just stable.

To reduce the steady state error, between the setpoint and feedback (Pv) increase the Ki.

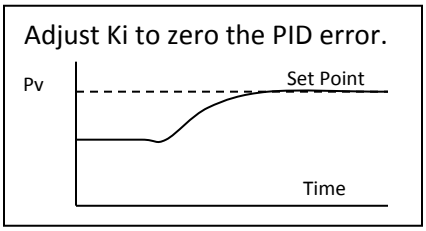

Further tune the "Ki" (Integral) by introducing a Set Point step and measuring the response. Pump Start could be used to introduce a step. On the set point step monitor the pressure feedback and change the "Ki "gain. With a step change set on the input of the PID ,the Process will react in the following manner, which is dependent on the setting on the "Ki" PID gains.

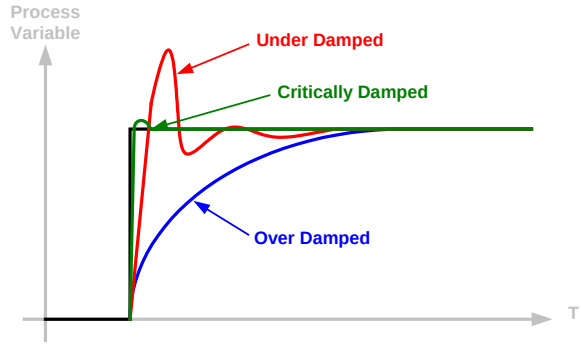

The PID should gains should be set, (or tuned) to ensure the Process has a 'critically damped' response. "Ki" eliminates an error the higher this gain the quicker the response.

If over damped add Ki

If under damped reduced Ki

Finally trim the Kp and Ki gain until a satisfactory response and steady state condition have been found.

Be careful of the acceleration and deceleration ramp setting as this will affect the pressure response. You will want to set these ramps high during tuning. Then set them to the desired ramp rates after tuning.

"Kd" is not used for pumps and can be set to zero.

6.7.9 Software No Flow

Parameter	Description	Units	Range	Drive Default	Pump Default
Pr 30.054 (Pr 0.041)	No Flow Freq	Hz	0 – 655.35	0.00	0.00
Pr 30.053 (Pr 0.042)	No Flow Freq BW	Hz	0 – 655.35	15.00	0.00
Pr 30.056 (Pr 0.043)	No Flow Const Freq Delay	Sec	0 – 6553.5	0.5	5.0
Pr 30.027 (Pr 0.044)	Set point decrement	PSI	0 25.5	1.0	10.0
Pr 30.055 (Pr 0.045)	No Flow Stabilize Delay	Sec	0 – 6553.5	2.0	1.0

"Software No Flow" detection logic: This condition is detected when the actual motor frequency (Pr 5.01) goes below the 'No Flow Frequency Set Point' Pr 30.054 and stays within a frequency bandwidth (+/- Window) set by Pr 30.053 for a time period Pr 30.056. At this point the Pressure set point is decremented by Pr 3.027. There is a stabilizing time delay as specified in Pr 30.055. If the pressure as tracked to the new pressure set point, by staying within the Pressure set point bandwidth, it is determined there is flow. If there was no flow, the old pressure would be retained.

When setting these parameters consider:

1. The "No Flow Freq (Pr 30.54) must be greater than the Minimum Frequency parameter (Pr 1.007). It should be greater than the Sleep freq (Pr 30.051).
2. The "Set point decrement" must be greater than "Pressure Set Point Band Width" (Pr 30.015). Enough so the new pressure set point is outside the Press bandwidth.

3. The “No Flow Freq BW” (Pr 30.053) must sit on top of the Min freq (Pr 1.007) and the sleep frequency (Pr 30.051)
   So “No Flow Freq BW” (Pr 30.053) >= No Flow Freq (Pr 30.54) minus Min freq (Pr 1.007).
   So “No Flow Freq BW” (Pr 30.053) >= No Flow Freq (Pr 30.54) minus Sleep freq (Pr 30.051).
4. The software No Flow operates above the Sleep frequency and the “No Flow Freq (Pr 30.54). The bandwidth should be sized so there is no gap between it and the sleep frequency.

Example setting

Parameter	Description	Example Setting	Comments
Pr 30.054 (Pr 0.041)	No Flow Freq	20 Hz	Sleep freq not used in this example.
Pr 30.053 (Pr 0.042)	No Flow Freq BW	6 Hz	Covers down to the 15 Hz min speed.
Pr 30.056 (Pr 0.043)	No Flow Const Freq Delay	15 sec	
Pr 30.027 (Pr 0.044)	Set point decrement	10 PSI	
Pr 30.055 (Pr 0.045)	No Flow Stabilize Delay	15 sec	
Pr 1.007	Minimum Frequency	15 Hz	

See Function diagrams section, Diagram #9.

6.7.10 Dry Well

Parameter	Description	Units	Range	Drive Default	Pump Default
Pr 30.063 (Pr 0.046)	Speed Torque Low Load Point	%	0.0 to 100.0	0.0	0.0
Pr 30.018 (Pr 0.047)	Dry Well Mode	-	0 = Alarm 1 = Decrease pump speed (by % in Pr 10.64) 2 = Trip(Tr 84) the Drive	2	2
Pr 30.062 (Pr 0.048)	Dry Well Delay	Sec	0 – 6553.5	0.0	0.0
Pr 30.064 (Pr 0.049)	Dry Well Freq Dec	Hz	0 to 100.00	0.00	1.00

In Auto mode, Drywell detection monitors the system for a light load with the motor at maximum speed. This can indicate a number of problems, one being air in the lines, a dry well. When dry well is detected, either the drive is tripped or the maximum motor speed is clamped until a load is detected.

In AUTO mode if the actual Motor Frequency,(Pr 5.001), is within the maximum frequency window (Pr 30.057) and the motor torque (Pr 4.020) is less than the Torque Low Set point (Pr 30.063) for a time

specified by Dry well detection time (Pr 30.062), then a dry well condition is sensed. Depending on the Dry Well Detection Mode chosen (Pr 30.018), the following actions are possible:

0 -Condition ignored
1 - Maximum Motor speed decreased by a percentage set by Pr 30.064
2 - Tripped with a fault code t084.

The M400 Simplex Pump program can be setup to detect a Dry Well condition. In order to set up this function, the pump load at Max Speed (Pr 1.06) must be determined. "Percentage Load" (Pr 4.020) will display the motor / pump load while running.

The simplest way to do this is to run the drive in Hand mode and set the Hand Speed Pr 0.023 (Pr 1.021) to the motor max reference(1.006), ie 60 Hz and observe the load. Be careful not to over pressure the system while performing this test. Insure that one valve is open. Assuming this load level measured is to 100%, the Low Load Set point Pr 30.063 needs to be set lower than 100%, say 80%.

If under normal running conditions (in AUTO Mode) the motor load drops below 80% while the drive is running at 100% speed for a time period set in Pr 30.062, the drive will perform the Dry Well function as selected by Pr 30.018. Other parameters pertinent to dry well are in the following table.

Parameter #	Function
Pr 4.20	Percentage Load the motor load in percent (RO).
Pr 30.046	Dry Well Digital Output
Pr 5.001	Output Frequency The actual output reference speed (Hz)
Pr 30.057	MaxFrequencyBandwidth
Pr 1.006	Maximum Reference Clamp The maximum Motor speed (Hz)

See Function diagrams section, Diagram #12.

6.7.11 Flow Meter scaling

Parameter	Description	Units	Range	Drive Default	Pump Default
Pr 30.066 (Pr 0.050)	Gallons Scale	- DP4	-32768 to 32767	0	55
Pr 30.067 (Pr 0.051)	Gallons Per minute scaling	- DP3	-32768 to 32767	0	493
Pr 30.035 (Pr 0.065)	Clear Gallons	-	1: clear Gallons Total	0	0
Pr 8.036	Digital Input 6 & 7 Mode	-	0- Digital 1 - Freq 2 - Encoder	0	1

The M400 has the ability to count pulses and to calculate the pulse rate. These counts are scaled in the onboard program to report GPM and total gallons. Total pulse counts are kept in a NVM 32 bit register. From the total pulse count the gallons used is available in (Pr 30.007). At a 150Hz pulse rate the count should be good for 6months (10 million gallons).

See Function diagrams section, Diagram #14.

Parameters reporting Flow gauge results.

Parameter	Description
Pr 30.006 (Pr 0.063)	Gallons per minute (RO)
Pr 30.007 (Pr 0.064)	Total Gallons (RO)

Equations for scaling:

Gallons = Position counter * "gallons per count scale"

GPM = Counts in 5 seconds * "GPM per 5 seconds of counts"

Gallons/minute = scale * (Counts / 5 seconds)

48.4 gpm = scale * 750,Scale = 48.4/750 = .0645
98 gpm = scale * 750, Scale = 98/750 = .1306
180 gpm = scale * 750, Scale = 180/750 = .2400
417 gpm = scale * 750, Scale = 417/750 = .5560
685 gpm = scale * 750, Scale = 685/750 = .9133

Gallons = scale * Hz * 60

48.4 = scale * 9000,Scale = 48.4/9000 = .0055
98 = scale * 9000, Scale = 98/9000 = .0111
180= scale * 9000, Scale = 180/9000 = .0200
417= scale * 9000, Scale = 417/9000 = .0464
685= scale * 9000, Scale = 685/9000 = .00761

The following table is for the Creative Sensor Technology Flow gauges. It holds the pre-calculated scaling.

Flow Meter	Gallons Pr30.066 Decimal :DP4	GPM Pr30.067 Decimal DP4	GPM at 150Hz
FSI-T10	.0055	.0645	48.4
FSI-T15	.0111	.1306	98
FSI-T20	.0200	.2400	180
FSI-T30	.0464	.5560	417
FSI-T40	.0761	.9133	685

This table identifies Drive Menu parameters that are used internally accessed or require Initialization to a constant shown here.

Parameter	Description	Default	Pump
Pr 8.026	Digital Input 6 Destination		Set=0.000 not used
Pr 3.029	Position		(RO) read by program
Pr 3.032	Position Counter Reset		(set by program)
Pr 3.035	Position Scaling Numerator		Set=1.000 not used
Pr 3.036	Position Scaling Denominator		Set=1.000 not used
Pr 30.065	Position Count Total		(RO) used by program

6.7.12 Pump Over Cycle

Parameter	Description	Units	Range	Drive Default	Pump Default
Pr 30.068	Over cycle Increment	PSI	0 – 10.0	1.0	1.0
Pr 30.069	Max Over Cycle Increment	PSI	0 – 200.0	10.0	10.0
Pr 18.013	Over Cycle Mode		0 – Disabled 1 – Trip Tr 86 2 – Increment PSI	0	0
Pr 18.014	Max Cycles in one hour		0 25.5	0	5

"Over Cycle " is when the pump turns on and off too often.
Possible causes for Pump over cycle are Low time delay values for sleep or start delay.

6.7.13 Advanced Drive Setup

Parameter	Description	Units	Range	Drive Default	Pump Default
Pr 5.014	Volts Mode		0 -5	4	2
Pr 5.015	Voltage Boost	%	0.0 to 25.0	3.0	1.0
Pr 4.007 (Pr 075)	Symmetrical Current Limit	%		0.0	110.0
Pr 5.013	Dynamic V/F Select		0 - 1	0	1
Pr 10.034 (Pr 0.077)	Auto Reset Number		0 to 6	0	5
Pr 10.035 (Pr 0.78)	Auto Reset Delay	Sec	0.0 to 600.0	0	10.0

See Function diagrams section, Diagram #6.

6.7.14 I/O Mapping

M400 STANDARD DIGITAL I/O					
Specification		Parameters			
Term No.	**I/O**	**Ind**	**Mode Select**	**Invert**	**Dest./ Source**
T9	24Vdc	-	-	-	-
T17	24Vdc	-	-	-	-
T6	0Vdc	-	-	-	-
T10	I/O 1	08.01	08.31	08.11	08.21
T11	I/O 2	08.02	08.32	08.12	08.22
T12	Input 3	08.03	-	08.13	08.23

T13	Input 4	08.04	-	08.14	08.24
T14	Input 5	08.05	08.35	08.15	08.25
T15	Input 6 Flow meter input	08.06	08.36	08.16	08.26
T16	Input 7	08.07	-	08.17	08.27
T41&T42	Relay	08.08	-	08.18	08.28

Parameter	Description	Units	Range	Drive Default	Pump Default
Pr 8.031	Terminal T10 Mode (I/O 1)	-	0: Input 1: Output	1	1
Pr 8.032	Terminal T11 Mode (I/O 2)	-	0: Input 1: Output	0	0
Pr 8.035	Terminal T14 Mode (In 5)	-	0: Digital 1: Thermistor 2: Thermistor 3: Thermistor	0	0
Pr 8.036	Terminal T15 Mode (In 6)	-	0: Digital 1: Freq 2: Encoder(n/a)	0	1
Pr 7.014	Analog Input 2 Map	-	0 30.999		0.000
Pr 8.021	Terminal T10 Map (I/O 1)	-	0 30.999	10.003	0.000
Pr 8.022	Terminal T11 Map (I/O 2)	-	0 30.999	0.000	0.000
Pr 8.023	Terminal T12 Map (In 3)	-	0 30.999	6.030	30.031
Pr 8.024	Terminal T13 Map (In 4)	-	0 30.999	6.032	30.032
Pr 8.025	Terminal T14 Map (In 5)	-	0 30.999	1.041	30.034
Pr 8.026	Terminal T15 Map (In 6)	-	0 30.999	6.031	0.000
Pr 8.027	Terminal T16 Map (In 7)	-	0 30.999	0.000	0.000
Pr 8.028	Terminal T41/42 Map (Relay 1)	-	0 30.999	10.001	10.001

The M400 Simplex Pump is controlled by digital functional inputs and reports status through digital functional outputs. They are assigned to Menu Parameters so I/O can be referenced to them. There are more functions than available I/O, however each pump application vary, and only a sub set is needed. Therefore you select which functions you want to control with hard wire connections and you map those functional bits to the I/O terminals.

Note: You can use the key pad to write and read these functions. However if they are mapped the I/O pin will over ride the value. If you want just keypad control set the mapping to zero.

Available Pump Input Functions

Available Pump Input Functions	Menu Parameter
Drive Reset	Pr 10.033
AUTO Mode Select Input	Pr 30.031
HAND Mode Select Input	Pr 30.032
No Flow Switch Input	Pr 30.034
Clear Gallons Count	Pr 30.035
Pressure Set point Select 1 Input	Pr 30.036
Pressure Set point Select 1 Input	Pr 30.037
Pump Fault Input	Pr 30.038
Over Temperature Fault Input	Pr 30.039

Available Pump Output Functions

Available Pump Output Functions	Menu Parameter
Pipe Fill Done Output	Pr 30.033
System Ready Output	Pr 30.040
Over Pressure Alarm Output	Pr 30.041
Within Frequency Bandwidth Output	Pr 30.042
Pressure At Reference Output	Pr 30.043
Loss Of Transducer Output	Pr 30.044
Running In Auto Output	Pr 30.045
Dry Well Low Suction Output	Pr 30.046
Auto Mode Selected Output	Pr 30.047
Hand Mode Selected Output	Pr 30.048
Under Pressure Fault Output	Pr 30.049

Available Unidrive M400 Drive Output Functions

Available Pump Output Functions	Menu Parameter
Drive Healthy (No Trips)	Pr 10.001
Drive Active	Pr 10.002
Zero Frequency (motor stopped)	Pr 10.003
Rated Load Reached	Pr 10.008
Current Limit Active	Pr 10.009

See Unidrive M400 user guide for more Unidrive M400 Output functions.

6.7.15 I/O Mapping For the SM IO Module

Refer to the SI-IO manual for details. For additional I/O functionality, this table shows some of the SI-IO parameters.

Parameter	Description	Units	Range	Drive Default	Pump Default
S.01.011	T2 Digital I/O 1 Mode (0-In. 1-Out)		0,1	0	
S.01.012	T3 Digital I/O 2 Mode (0-In. 1-Out)		0,1	0	
S.01.013	T4 Digital I/O 3 Mode (0-In. 1-Out)		0,1	0	
S.01.014	T5 Digital I/O 4 Mode (0-In. 1-Out)		0,1	0	
S.01.015	T7 Input 5/AI Mode (0-In. 1-AI)		0,1	1	
S.01.016	T8 Input 6/AI Mode (0-In. 1-AI)		0,1	1	
S.01.017	T9 Input 7/AI Mode (0-In. more)		0 to 11	1	
S.01.017	T11 Input 7/AI Mode (0-In. more)		0 to 5	1	
S.02.011	T2 Digital I/O 1 Invert		0,1	0	
S.02.012	T3 Digital I/O 2 Invert		0,1	0	
S.02.013	T4 Digital I/O 3 Invert		0,1	0	
S.02.014	T5 Digital I/O 4 Invert		0,1	0	
S.02.015	T7 Input 5 Invert		0,1	0	
S.02.016	T8 Input 6I Invert		0,1	0	
S.02.017	T9 Input 7 Invert		0,1	0	
S.02.018	T11 Input 8 Invert		0,1	0	
S.02.019	T21/T22 Relay 1 Invert		0,1	0	
S.02.020	T23/T22 Relay 2 Invert		0,1	0	
S.02.021	T2 Digital I/O 1 Dest/Source	-		0	
S.02.022	T3 Digital I/O 2 Dest/Source	-		0	
S.02.023	T4 Digital I/O 3 Dest/Source	-		0	
S.02.024	T5 Digital I/O 4 Dest/Source	-		0	
S.02.025	T7 Digital In 5 AI 1 Destination			0	
S.02.026	T8 Digital In 6 AI 2 Destination			0	
S.02.027	T9 Digital In 7 AI 3 Destination			0	
S.02.028	T11 Digital In 8 AO Source			0	
S.02.029	T21/T22 Relay 1 Source			0	
S.02.030	T23/T22 Relay 2 Source			0	

6.8 Hand Mode (manual) Start Up

Upon selecting Hand mode the pump will run at a fixed speed specified in the ”Hand Mode Speed” (Pr 1.021 /Pr 0.023) until the Hand input is removed.

1. Ensure the pump is ready for operation.
2. Ensure AUTO mode is deactive.
3. Enter the desired motor frequency in Hand Mode Speed”.
4. Set the Hand Input function 30.031.

7 Simplex Pump Operation

This section describes the Simplex pump operation and how the parameter settings are used.

The simplex pumping operation has 2 main control modes, HAND and AUTO. These modes can be selected from drive terminals, keypad or CTVue.

The HAND or AUTO mode will not run if the Pump drive is Inhibited/Off. The keypad displays 'Inhibit' in this condition.

7.1 Hand and Auto Modes

See Function diagrams section, Diagram #0.

7.1.1 HAND Mode

This mode is mostly used for maintenance. The HAND mode can be selected from either the drive terminals or from the drive keypad. In HAND mode, the drive will run the motor at the set speed determined by the frequency reference as set in (Pr 0.023 / Pr 1.021). Relevant setup parameters for this mode are shown in the table below:

Parameter	Description	Units	Range	Drive Default	Pump Default
Pr 1.021 (Pr 0.023)	HAND Mode Speed (Frequency) Setpoint	Hz	+/- 1500.00	0.00	
Pr 30.032	Hand Mode select	enable	0,1	0	
Pr 30.048	Hand Mode selected (RO)	active	0,1	-	
Pr 8.024	Terminal T13 Map (In 4) (Default terminal mapping for HAND)	-	0 30.999	6.032	30.032

7.1.1.1 Control from Drive Terminals

a Close the 'HAND' switch (drive terminals T13). The drive runs in HAND mode. T12 must be off because 'AUTO' overrides "HAND'.

b Opening the 'HAND' switch will disable HAND mode and stop the drive.

7.1.1.2 Control from Drive Keypad:

a Clear the HAND Terminal mapping by Pr 8.024 = 0.
Clear the AUTO Terminal mapping by Pr 8.023 = 0. (AUTO will override HAND)

b Set Pr 30.032=1 to run HAND.
Set Pr 30.032=0 to disable HAND.

7.1.1.3 Control from CTVue:

You can configure CTVue to control the Hand and AUTO modes. In HMI enabled mode it clears the mapping of the terminal connections and directly sets HAND (Pr. 30.032) and AUTO (Pr 20.031)

7.1.2 AUTO Mode

In Auto mode, the pump speed will be automatically controlled by the PID controller in order to regulate the setpoint pressure control. Setpoint PID pressure control is functional only in AUTO mode. The AUTO mode can be initiated from either the drive terminals or from the drive keypad. In AUTO mode, the pump start/stop sequence is automatically controlled.

Parameter	Description	Units	Range	Drive Default	Pump Default
Pr 30.031	Auto Mode select	enable	0,1	0	
Pr 30.047	Auto Mode selected (RO)	active	0,1	-	
Pr 30.045	Running in Auto Mode (RO)	active	0,1	-	
Pr 8.023	Terminal T12 Map (In 3) (Default terminal mapping for AUTO)			6.030	30.031

7.1.2.1 Control from Drive Terminals

a Close the 'AUTO' switch (drive terminals T12). The drive runs in AUTO mode. AUTO overrides HAND mode selection.

b Opening the 'AUTO' switch will disable AUTO mode and stop the drive.

7.1.2.2 Control from Drive Keypad:

a Clear the HAND Terminal mapping by Pr 8.024 = 0.
Clear the AUTO Terminal mapping by Pr 8.023 = 0. (AUTO will override HAND)

b Set Pr 30.032=1 to run HAND.
Set Pr 30.032=0 to disable HAND.

7.1.2.3 Control from CTVue:

You can configure CTVue to control the Hand and AUTO modes. In HMI enabled mode it clears the mapping of the terminal connections and directly sets HAND (Pr. 30.032) and AUTO (Pr 20.031)

Note: With no mode selected (e.g. Auto or Hand) the drive will be inhibited.

7.2 Pump Operation

The M400 Simplex Pump uses a Pressure Transducer (T2) to provide pressure feedback to a PID Controller. The PID controller then defines the Motor speed to maintain a setpoint pressure. The pressure feedback with the motor speed and the optional Flow Switch, provide the controls to Start and Stop the pump. See Function diagrams section, Diagram #1.

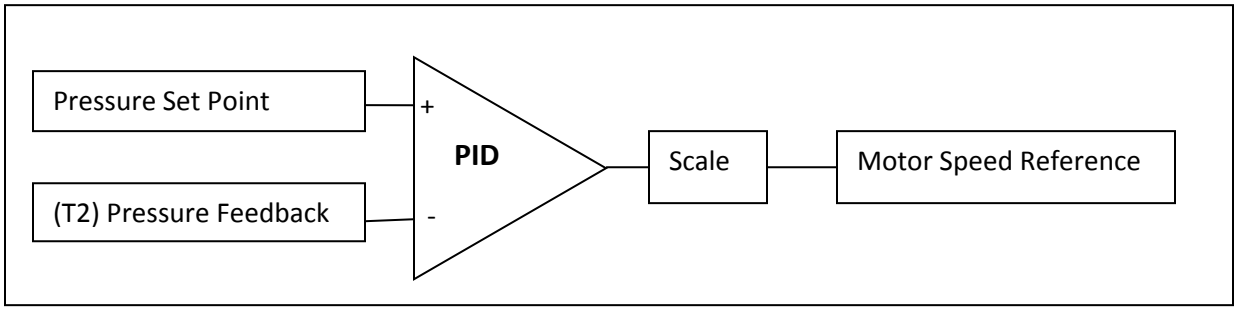

When the drive is placed in the AUTO mode, the display will switch from "inhibit" to "ready".

- At this point the pump will stay idle until the Pressure Transducer detects a low pressure. The pump will start when the feedback pressure (Pr 30.009) is less than the "Low Pressure On"Pr (Pr 30.013) for a period of time set in "Start Delay"(Pr 30.059) in seconds.
- At the drive start, the pump will run the Pipe Fill for its duration. Pipe fill runs at the Pipe fill Speed (1.026) for the Pipe Fill Delay (Pr 30.061). The pipe fill can be stopped early if the feedback pressure exceeds "PipeFillMaxPressure" (Pr 30.029).
- After pipe fill, the pump speed is controlled by the PID Controller by comparing the Pressure feedback from the transducer to a user defined pressure set point. The PID uses The Final Pressure Set point (Pr 30.012) which has multiple sources, the primary source being the "Pressure MainSetpoint0"(Pr 30.030)
- The pump will continue to run until a stop condition is detected. After the stop, the pump will go idle and wait for the low Pressure start. The pump can be stopped by any of three stop conditions. – Sleep is detected, Software No flow and the No Flow Switch. Sleep has the "SleepDelay" (30.052). The No Flow Switch has the "No Flow Switch Delay"(Pr 30.060), The Software No Flow has delays for each of it's stages. With a Flow gauge, you can also stop the pump with "GPMLowStop" (30.004) for it's delay"GPMLowStopDelay" (30.005).

  Sleep is detected when the PID drives the motor speed below a threshold due to a low flow demand, when the motor speed drops below the Sleep Freq (Pr 30.051) for the sleep delay (Pr 30.052), the sleep is detected and will initiate the Stop.

  The Software No Flow is an algorithm to detect no flow without the need of a flow switch. It covers a field condition where the PID drives the motor at a speed above the sleep frequency but the flow demand is off. The Software No Flow detect will initiate a Stop.

CAUTION

Ensure delay is set high enough to establish flow on start up.
Sleep and No flow should delayed beyond the pump start time.

The No Flow Switch is an option. It is enabled if the "NoFlowSwitchDelay" (Pr 30.060) is non-zero. greater. The No Flow switch indicates a no flow (digital signal can be inverted), it will initiate the Stop after waiting for the "NoFlowSwitchDelay" (Pr 30.060).

NOTE: Care should be taken when setting the stop time since too long of a time could over pressure the system.

NOTE: Care should be taken when setting the pipe fill time since too long of a time could over pressure the system.

Parameter	Default Setting	Function
Pr 1.006 (Pr 0.002)	60 Hz	Motor Max Frequency
Pr 30.013 (Pr 0.018)	0.0 PSI	Low Pressure On "Wake"
Pr 30.059 (Pr 0.019)	0 sec	Start Delay Time
Pr 30.060 (Pr 0.020)	0 sec	No Flow Switch Delay Time
Pr 30.051 (Pr 0.021)	0.00Hz	Sleep Freq
Pr 30.052 (Pr 0.022)	0 .0sec	Sleep Delay
Pr 30.004 (Pr 024)	1.0 gpm	GPM low Stop
Pr 30.005 (Pr 025)	0.0 s	GPM low Stop Delay
Pr 30.057 (Pr 028)	1.00 Hz	Max Freq Bandwidth
Pr 30.030 (Pr 0.032)	0.0 PSI	Pressure MainSetpoint0
Pr 30.015 (Pr 0.034)	0.5 PSI	Pressure Setpoint Bandwidth
Pr 1.026 (Pr 0.035)	0.00Hz	Pipe Fill Speed
Pr 30.061 (Pr 0.036)	0 sec	Pipe Fill Time
Pr 30.029 (Pr 0.037)	0.0	Pipe Fill Max Pressure

7.2.1 Constant Pressure Setpoint Control

7.2.1.1 Pressure Setpoint Selection

The Pump System "Selected Pressure Setpoint" (Pr 30.011) sets the PID reference input for the pressure control system. The default source for this is "Pressure Main Setpoint"(Pr 0.032 /Pr 30.030) however, if multiple pressure setpoints are necessary, this can be achieved by adding an SI-I/O module and mapping it's digital inputs to Pr30.036 and Pr 30.037. These provide a selection mechanism to select the alternate pressure set points (Pr 30.024, 30.025, 30.026). The setpoint pressures must be set within the min and max pressure ranges (Pr 30.022 and Pr 30.023).

30.036	30.037	Pump System Set-Point
Open	Open	Main Set Point
Closed	Open	Set-Point 1 (Pr 30.024)
Open	Closed	Set-Point 2 (Pr 30.025)
Closed	Closed	Set-Point 3 (Pr 30.026)

The PressureFinalSetpoint (Pr 30.012) is the actual pressure set point value sent to the PID. This is the "PressureSelectedSetpoint"(Pr 30.011) which is dynamically adjusted by the Software No Flow detection algorithm and the Over cycle adjustment. See Function diagrams section, Diagram #4.

7.2.1.2 Maintaining Pressure

Pressure is maintained by receiving the pressure feedback from an analog Input. The value of the analog input is connected via a filter (Pr 14.015). Then it is scaled and compared to the Pressure set point in the PID. The error output of the PID defines the Motor speed as a frequency reference.

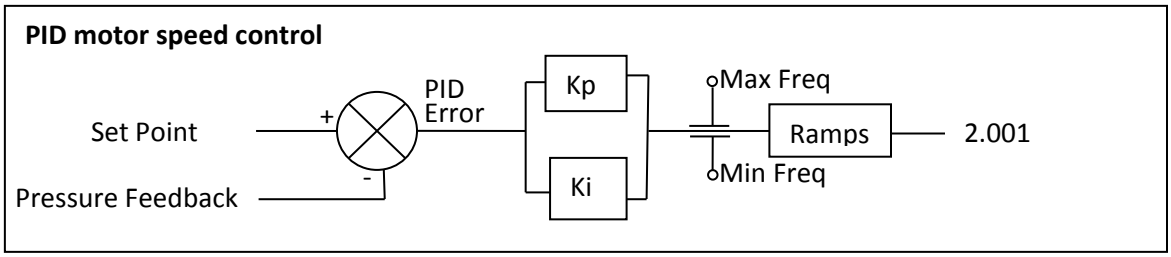

When the pressure is too high, the PID error (-Ve) will be negative. This will drive the motor speed to 0 Hz. When the pressure is too low, the PID output (+Ve) will be positive. This will drive the Motor speed to Maximum Hz. The PID response is set with the PID gains. The control response delay will be affected by the Ki gain term. The Acceleration and Deceleration ramps will also affect the system response.

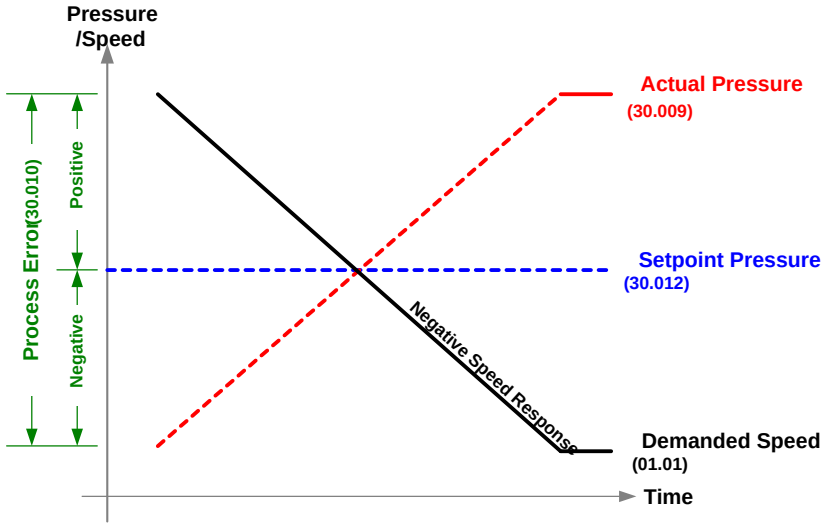

The Proportional gain is the instantaneous amplification factor that is applied to the process error.

Pout = p .

The Proportional term must have an error to produce an output. The magnitude of the output is dependent on the magnitude of the error and the amount of proportional gain.

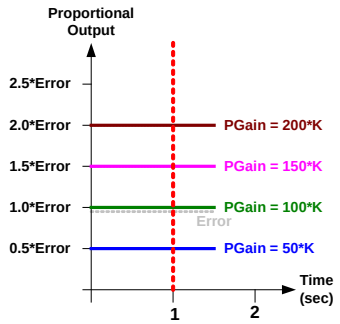

The integral gain is amplification factor of the error over time.

I_{out} = (I . . t) / 10

The integral term accumulates any error over time to help reduce any offset or long-term errors. Ki is a multiplication co-efficient of the integrated value.

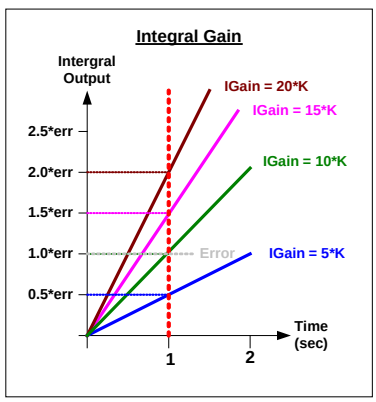

The derivative gain is amplification factor of the rate of change of error.

D_{out} = (K_d . / t) / 10

The Differential term is the rate of change of the error multiplied by the Kp co-efficient. This is responsive during transient conditions; therefore it is zero during steady state condition. It is useful to reduce the overshoot during large disturbances. The differential gain is rarely used in most applications as it will amplify any unwanted noise to the system and can cause instability.

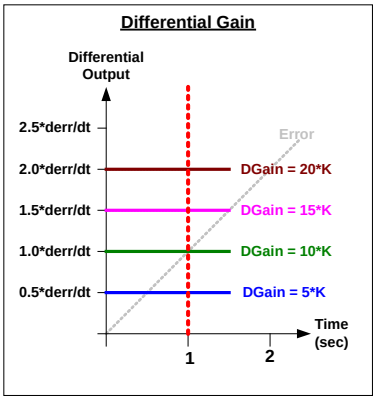

The pump controls start and stop with the program sequencer and selects alternative Speed References for Pipe fill, Transducer loss and Hand Mode.

7.2.2 Sleep

When in AUTO mode, if the motor frequency command from the PID controller drops below Minimum Sleep Frequency (Pr 30.051) for duration set by Pr 30.052, sleep mode will be initiated. The drive will stop controlling the motor and will restart when the start criteria are met. The motor speed drop is due to a higher feedback pressure as compared to the setpoint pressure. This Sleep is the most common method to idle/stop the pump. It is an energy saving function.

"Sleep Mode" is enabled by setting the "Sleep Frequency, (Pr 30.051) to a non- zero value and a setting the "Sleep Time Delay" (Pr 30.052). This function will put the drive into a "ready" state if the motor frequency drops below the "Sleep Frequency ". The "Sleep Frequency" must be set higher than the Minimum Frequency (Pr 1.007).

The Pump goes idle when any of the Stop conditions is met for the "Stop Delay" (Pr 30.060). Normally Sleep or Software No Flow should be used but not both. The No Flow Switch is another stop condition.

Sleep Setup

Parameter #	Default Setting	Example Setting (pump)	Function
30.051(0.021)	0.00 Hz	20.00 Hz	Minimum Sleep Frequency 0 disables
30.052(0.022)	0.0 sec	15.0 sec	Sleep Time Delay
1.007(0.001)	0.00 Hz	15.00 Hz	Minimum Speed Parameter

Normally Sleep or No Flow would be used, not both.

7.2.2.1 Software No Flow

The Pump goes idle when any of the Stop conditions is met for their time delay. Normally Sleep or Software No Flow should be used but not both. "Software No Flow" is enabled by setting the "No Flow Frequency Setpoint" (Pr 30.054) to a non-zero value.

For No flow the system goes through 3 steps to detect NoFlow.

1) It monitors the motor frequency and if it is below the “No Flow Freq Setpoint” (Pr 30.054) No Flow condition 1 is met.
2) It monitors the motor frequency and if it is within “No Flow Freq Setpoint”(Pr 30.054) +/- “No Flow Freq bandwidth”(Pr 30.053) for the period of time set in “No Flow Constant Freq Delay” (Pr 30.056) the “No Flow” condition 2 is met.
3) At this point the pressure set point is reduced by “PressureSetpointDecrement” 30.027. After a “NoFlow Stabilizing Delay” (Pr 30.055), the “Pressure At Setpoint” (Pr 30.043) signal is checked to see if the pressure tracked the Pressure reduction. If pressure did not, a NoFlow is detected.

NOTE: The “No Flow Frequency Setpoint”(Pr 30.054) must be set higher than the Minimum Frequency (Pr 0.01/Pr 1.007).

NOTE: In setting up the system, ensure that there is no dead space between the NoFlow lower bandwidth and the sleep frequency. ((Pr 30.054-30.053) =< 30.51)

No Flow Setup

Parameter #	Default Setting	Example Setting (pump)	Function
30.054 (0.041)	0.00 Hz	20.00 Hz	No Flow Frequency Setpoint
30.053 (0.042)	0.00 Hz	6.00 Hz	No Flow Frequency Bandwidth
30.056 (0.043)	0.0 sec	15.0 sec	No Flow Constant Freq Delay
30.027 (0.044)	1.0 PSI		Pressure set point Decrement
30.055 (0.045)	0 sec	15 sec	No Flow Stabilizing Delay
1.007(0.001)	0.00 Hz	15.00 Hz	Minimum Speed Parameter

7.3 Fault Protection

See Function diagrams section, Diagram #7 and #8.

7.3.1 Transducer Loss (4-20 mA only)

In case of transducer feedback loss, one of the following actions is taken by the pump control system based upon the setting of Pr 30.017.

0 = Disabled (Ignore fault)
1 = Fault Drive (Trip Code t081)
2 = Run at Fixed Speed (set in Pr 1.027)

When a 4-20 mA transducer is used (4-20 ma is normally the case), the drive can be faulted or forced to run at a fixed speed (as set by Pr 1.027) if the transducer signal is lost (i.e. drops below 3.5 mA).

Parameter #	Default Setting	Function
Pr 30.017 (Pr 0.015)	1	0 = Disabled 1 = Trip Drive (t081) 2 = Run at fixed speed (frequency)
Pr 1.27 (Pr 0.016)	0 Hz	Motor frequency when transducer signal loss

Use caution when setting Transducer Loss. The pressure transducer is broken which results in the pressure feedback reading zero. Running the pump without a pressure

Warning transducer may cause an over pressure condition. When using this feature it is highly recommended that a Flow Switch, redundant to the transducer, is used to stop the motor on a No Flow condition. Pumping during no flow could potentially cause an over pressure condition.

7.3.2 Over Pressure Alarm/Trip

In AUTO mode the drive can detect two over pressure levels – Alarm and Trip. The Alarm (Pr 30.041) is set when the pressure exceeds the alarm level (Pr 30.020). The alarm remains active until the feedback pressure drop below 95% of the alarm level (Pr 30.020). The alarm (Pr 30.041) can be assigned to a digital output or relay output to report this alarm.

If the Feedback pressure is equal to or exceeds the "Over pressure trip level" (Pr 30.021) the drive will trip, displaying a t082 code on the drive display.

Parameter #	Default Setting	Function
Pr 30.020 (0.026)	0%	Over Pressure Alarm Setting
Pr 30.041	0	Flag parameter for Alarm (RO)
Pr 30.021 (0.027)	0%	Over Pressure Trip Setting (Tr 82)

7.3.3 Under Pressure Feedback Trip

Under pressure is an indication that the pump cannot maintain demand at full speed. This could be an indication of a broken pipe.

Demand can be measured with 2 selectable configurations:

Pr 30.050 = 0 System Set Point Bandwidth. The PID is very reliable in holding the pressure within its bandwidth. You can define you under pressure as being under the Pressure Set point bandwidth (Pr 30.015). When the pressure (Pr 30.002) is below the setpoint bandwidth (Pr 30.015) and the motor frequency is within maximum frequency bandwidth (Pr 01.006 –Pr 30.057) for a duration more than Under Pressure Detect Time (Pr 30.058), the pump drive is tripped and indicates trip code t083.

Pr 30.050 = 1 Under Pressure Setpoint. You can just define a pressure level (Pr 30.014). When the pressure feedback (Pr 30.009) is below the under pressure setpoint (Pr 30.014) and the motor frequency is within the maximum frequency bandwidth (Pr 1.006 - 30.057), for a duration more than Under Pressure Detect Time (Pr 30.058), the pump drive is tripped with a trip code t083.

Under pressure Conditions:

Under Pressure delay must be non Zero
Motor must be at max speed.
Pipe fill must be complete.
Pressure must be below either the Under press level or below Set point bandwidth. (Mode selected)
Transducer must be operational.

Parameter #	Default Setting	Function

Pr 30.050 (0.030)	0	UnderPressureMode 0 – Pressure Setpoint 1 - Level
Pr 30.014 (0.031)	0.0	UnderPressureLevel
Pr 30.057 (0.028)	1.00	Max Frequency Bandwidth
Pr 30.015 (0.034)	5.0	Pressure SetPoint Bandwidth

7.3.4 DryWell

While in Auto mode, the drive is monitored for high speed and low load. This indicates air in the system, a dry well. The response actions for Dry Well are: 0) No action, 1) Trip the drive (Tr 84) 2) Limit the motor speed until the pump has a load.

In detail, the Dry Well function monitors the Drive Torque (Pr 4.020) for being below the "Speed / Torque Low Load Point" (Pr 30.063) while within "Max Frequency Bandwidth"(Pr 30.057) for the duration of "Dry Well Detection Delay" (Pr 30.062). If true, a Dry Well is detected. Based on "DryWellModeSelection"(Pr 30.018) the drive is either takes no action, trips (tr84) or the PID output is limited(Pr 14.013) by "LowSuctionFreqDecrement" (Pr 30.064).

Parameter #	Default Setting	Function
Pr 30.018 (0.047)	2	Drywell Mode 0 – Disabled 1 – Trip t084 2 – Limit Max PID output
Pr 4.020	R/O	Drive Torque
Pr 30.046	R/O	Drywell low suction output
Pr 14.013	100.00%	PID1 Output Upper Limit
Pr 30.062	0.0	Dry Well Delay
Pr 30.063	0.0	Speed Torque Low Load Point
Pr 30.064 (0.049)	0.00	Low Suction Freq Decrement
Pr 30.057 (0.028)	1.00	Max Frequency Bandwidth

7.3.5 Over Cycle

If the number of startup events in one hour exceeds the "Max Cycles" setting(Pr 18.014), the Over cycle either trips the drive or alters the setpoint pressure.

If the Over Cycle mode (Pr18.013 = 0), over cycle is disabled.
If the Over Cycle mode (Pr18.013 = 1), the drive will t086 trip if the number of startups within the hour exceeds the "Max Over Cycle" (Pr 18.014).
If the Over Cycle mode (Pr18.013 = 2), the pressure will be adjusted within the one hour timer for every over Max Cycles is exceeded within the hour. The pressure adjustment is an increment (Pr 30.08) of the "Final Pressure set point" (pr30.012) up to a maximum increment (Pr 30.069). When the increment is executed the start cycle count is reset, but not the one hour timer. At the end of the hour the over cycle increment is reset and the over cycle function starts again.

Parameter #	Default Setting	Function
Pr 18.013	0	Over cycle modeMode 0 – Disabled 1 – Trip t086 2 – Increment Pressure Reference
Pr 18.014	5	Max Cycles in one hour
Pr 30.068	1.0	Overcycle Increment
Pr 30.069	10.0	Max Overcycle increment

NOTE: The one hour timer is fixed at one hour and starts on the first drive start. The timer is reset after the end of the hour.

8 SI-I/O Module, Additional Digital and Analog Terminals

An SI-I/O Module can be added to theM400 Simplex Pump system to provide additional system features. The drawing below illustrates them.

8.1 Additional Parameter Settings for the SI-I/O Module

See the SI I/O user guide for information.

Parameter #	Default Setting	Pump Setting	Function
s.02.021	0.00.000	30.036	T2 mapped to Multi Setpoint Select 1 Input
s.02.022	0.00.000	30.037	T3 mapped to Multi Setpoint Select 2 Input
s.02.023	0.00.000	10.033	T4 mapped to Reset Input
s.02.024	0.00.000	30.039	T5 mapped to Over Temperature Switch Input
s.02.025	0.00.000		T7 mapped to spare
s.02.026	0.00.000		T8 mapped to spare
s.02.027	0.00.000		T9 mapped to spare
s.02.028	0.00.000		T11 mapped to spare
s.02.029	0.00.000		T21 Relay 1 source- Alarm
s.02.030	0.00.000		T23Relay 2 Source

9 Backing-up the Set-up Parameters

After you have succeeded in setting up the M400 Simplex Pump to your satisfaction, this setup data defines the essence of the application and allows the drive to perform as it was intended per your application. Should it become necessary to replace a drive, without this critical data, the drive would be unable to perform as it was originally intended.

NOTE: Control Techniques will be able to provide you with a replacement drive but will not have the "recipe" (data) that was specific for your application. Therefore, it is imperative that the OEM, System Integrator, Field Engineer or Installer back up this critical information and leave a copy with the End User following the commissioning process. Failure to do so can result in unnecessary machine downtime.

9.1 AI-Back-up Adaptor / SD card Method

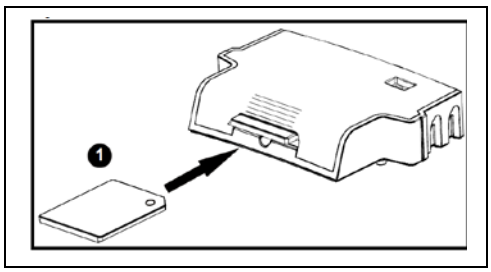

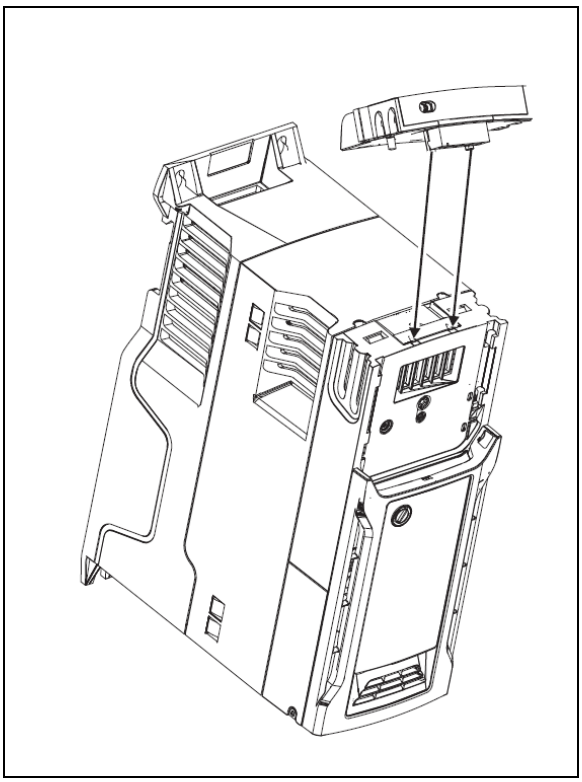

A “AI-Back-up Adaptor” can be purchased as an option for the M400 drive. This adaptor has a SD card connection.

An AI-Back up Adaptor with SD card programmed with Simplex Pump Files may be purchased. The data on this SD has been made "read-only" (boot mode) so it can always be used to get back to a factory default pump parameters if need be. In order to return the M400 Simplex Pump drive back to factory settings you would first reset the drive to defaults (Pr 11.043=2 “US”) then push the stop / reset button, Now power down the drive, insert the SD then power the drive back up. The parameters will load automatically. Press the stop reset button once power up is complete.

The drive will now have all of the required default parameter settings. The program can now be set up for the application.

File 1 – Parameter file, user settings saved.
File 2 – Onboard program
File 3 –Parameter file, Factory defaults without Si-I/O parameters
File 4 – Parameter file, Factory defaults with Si-I/O parameters

Parameters that are set to defaults if drive rating do not match the file. See M400 user guide.

Standard Ramp Voltage (02.008)
Motoring Current Limit (04.005)
Regenerating Current Limit (04.006)
Symmetrical Current Limit (04.007)
User Current Maximum Scaling (04.024)

Motor Rated Current (05.007)
Motor Rated Voltage (05.009)
Motor Rated Power Factor (05.010)
Stator Resistance (05.017)
Maximum Switching Frequency (05.018)
Transient Inductance /Ld (05.024)
Stator Inductance (05.025)
Injection Braking Level (06.006)
Supply Loss Detection Level (06.048)

9.1.1 Simple steps for (AI-Back-up Adaptor / SD)

Enter the command into a parameter 0. Then press reset. Expect to wait until the Keypad says "No Action" indicating the process is complete.

NOTE: You must delete the existing file before you write to it. To delete set Parameter 0 to 7yyy where yyy is the file number and press reset.

9.1.1.1 Load Factory settings into your drive

- Pr xx.000 = 6002, reset the drive {Loads Onboard program from file 2}
- Pr xx.000 = 6003, reset the drive {Loads Parameter file without SI-I/O from file 3}
  - Or Pr xx.000 = 6004, reset the drive { Parameter file with SI-I/O module}

9.1.1.2 Save User Settings

- Enter all the setting for Simplex Pump operations
- If file exists: Pr xx.000 = 7001, reset the drive {Erase an existing file}
- Pr xx.000 = 4001, reset the drive {Write drive parameters into file 1}

9.1.1.3 Read User Settings into your drive

- Pr xx.000 = 6001, reset the drive {Write drive parameters }

9.1.2 NV Media card Parameters (AI-Back-up Adaptor / SD)

Pr mm.000 "**Parameter 00 (RO)"** The following table shows the Parameter 0 commands that pertain to the Non-Volatile media card. These commands are used to save and restore parameter files and the onboard user program. The command is executed on reset. If the action is completed successfully parameter mm.000 is cleared when the action is complete.

mm.00 value	Action
2001	Create a boot file on a non-volatile media card based on the present drive parameters including all Menu 20 parameters
4xxx	NV media card: Transfer the drive parameters to parameter file xxx
5xxx	NV media card: Transfer the onboard user program to onboard user program file xxx
6xxx	NV media card: Load the drive parameters from parameter file xxx or the onboard user program from onboard user program file xxx
7xxx	NV media card: Erase file xxx
8xxx	NV Media card: Compare the data in the drive with file xxx
9555	NV media card: Clear the warning suppression flag
9666	NV media card: Clear the warning suppression flag
9777	NV media card: Clear the read-only flag
9888	NV media card: Set the read-only flag
9999	NV media card: Erase and format the NV media card
40yyy	Backup all drive data (parameter differences from defaults, an onboard user program and miscellaneous option data), including the drive name; the store will occur to the </fs/MCDF/driveyyy/> folder; if it does not exist, it will be created. Since the name is stored, this is a backup, rather than a clone. The command value will be cleared when all drive and option data has been saved.
60yyy	Load all drive data (parameter differences from defaults, an onboard user program and miscellaneous option data); the load will come from the <fs/MCDF/driveyyy/> folder. The command value will not be cleared until the drive and all option data have been loaded.

Recommend (see Pr 11.042):

File 1 – Parameter file, with user settings

File 2 – Onboard program

Trips that apply to the NV Media card

Trip #	Name	Description
185	Card Access	Communication failure, transfer incomplete.
177	Card Boot	Boot file was not created.
178	Card Busy	
188	Card Compare	Card compare was executed and the file and the drive do not match.
179	Card Data Exists	The file already exists.
187	Card Drive Mode	Mismatch in Drive mode between drive and file.
182	Card Error	The Card is corrupted. 1) Folder and file structure not present 2) Header.Dat corrupted 3) 2 or more files in oldata\drive folder have the same name.
183	Card Full	
183	No card data	
180	Card Option	Option Module and card data do not match
175	Card Product	Drive Derivate and card data do not match
186	Card Rating	Drive current/Voltage ratings and card data do not match.
181	Card Read Only	

Pr 11.036 "**NV Media Card File Previously Loaded (RO)"** shows the number of the last parameter file transferred from an NV Media Card to the drive. If defaults are subsequently reloaded NV Media Card File Previously Loaded (11.036) is set to 0.

Pr 11.037 **"NV Media Card File Number (RW)"**is used to select a file by its file identification number and can only be changed to values that correspond to files that are recognized by the drive on the NV media card or a value of 0. When *NV Media Card File Number* (11.037) corresponds to the number of a file the following data about the file is shown.

NV Media Card File Type (Pr 11.038)
NV Media Card File Version (Pr 11.039)
NV Media card File Checksum (Pr 11.040)

Pr 11.038 "**NV Media Card File Type(RO)"** shows the file type of the file selected with *NV Media Card File Number* (11.037) as shown in the table below

0 – No file selected
1 – Open loop mode parameter file
2 – RF-C mode parameter file
3 – Reserved
4 – Reserved
5 – Onboard user program file

Pr 11.039 "**NV Media Card File Version(RO)"** shows the version number stored with the file selected selected with *NV Media Card File Number* (Pr 11.037)

Pr 11.040 "**NV Media card File Checksum**"

Pr 11.042 **"Parameter Cloning (RW) "**can also be used to initiate data transfer to or from an NV media card as described below for each possible value of this parameter.

0: None
1: Read
Provided a parameter file with file identification number 1 exists on the NV media card then setting "Parameter Cloning" (Pr 11.042) = 1 and initiating a drive reset (or exit from edit mode on a keypad) will transfer the parameter data to the drive (i.e. the same action as writing 6001 to Parameter mm.000 (mm.000)). When the action is complete "Parameter Cloning" (Pr 11.042) is automatically reset to zero.

2: Program
Setting "Parameter Cloning" (Pr 11.042) = 2 and initiating a drive reset (or exit from edit mode on a keypad) will transfer the parameter data from the drive to a parameter file with file identification number 1. This is the same action as writing 4001 to Parameter mm.000 (mm.000) except that the file will be overwritten if it already exists. When the action is complete "Parameter Cloning" (Pr 11.042) is automatically reset to zero.

3: Auto
Setting "Parameter Cloning" (Pr 11.042) = 3 and initiating a drive reset (or exit from edit mode on a keypad) will transfer the parameter data from the drive to a parameter file with file identification number 1. This is the same action as writing 4001 to Parameter mm.000 (mm.000) except that the file will be overwritten if it already exists. When the action is complete "Parameter Cloning" (Pr 11.042) remains at 3.

If the card is removed when “Parameter Cloning” (Pr 11.042) = 3, then “Parameter Cloning” (Pr 11.042) is set to 0, which forces the user to change “Parameter Cloning” (Pr 11.042) back to 3 if auto mode is still required. The user will need to set “Parameter Cloning” (Pr 11.042) = 3 and initiate a drive reset to write the complete parameter set to the new card.

When a parameter in Menu zero is changed via the keypad and “Parameter Cloning” (Pr 11.042) = 3 the parameter is saved both to the drive non-volatile memory and to the parameter file with identification number 1 on the card. Only the new value of the modified parameter, and not the value of all the other drive parameters, is stored each time. If “Parameter Cloning” (Pr 11.042) is not cleared automatically when a card is removed, then when a new card is inserted that contains a parameter file with identification number 1 the modified parameter would be written to the existing file on the new card and the rest of the parameters in this file may not be the same as those in the drive.

When “Parameter Cloning” (Pr 11.042) = 3 and the drive parameters are saved to non-volatile memory, the file on the card is also updated, therefore this file becomes a copy of the drive parameters. At power up, if “Parameter Cloning” (Pr 11.042) = 3, the drive will save its complete parameter set to the card. This is done to ensure that if a card is inserted whilst the drive is powered down the new card will have the correct data after the drive is powered up again.

4: Boot
When Parameter Cloning” (Pr 11.042) = 4 the drive operates in the same way as with Parameter Cloning” (Pr 11.042) = 3 and automatically creates a copy of it parameters on the NV Media card. The NC (not clonable) attribute for Parameter Cloning (11.042) is 1, and so it does not have a value stored in the parameter file on the card in the normal way. However, the value of “Parameter Cloning” (11.042) is held in the parameter file header.
If “Parameter Cloning” (11.042) = 4 in the parameter file with a file identification value of 1 on an NV media card fitted to a drive at power-up then the following actions are taken:

1. The parameters from the parameter file with file identification number 1 are transferred to the drive and then saved in non-volatile memory.
2. If an onboard user program file with file identification number 2 exists then the onboard user program from this file is transferred to the drive.
3. “Parameter Cloning” (Pr 11.042) is set to 0 after the data transfer is complete.

It is possible to create a bootable parameter file by setting Parameter mm.000 (mm.000) = 2001 and initiating a drive reset. This file is created in one operation and is not updated when further parameter changes are made.

When the drive is powered up it detects which option modules are fitted before loading parameters from an NV media card which has been set up for boot mode. If a new option module has been fitted since the last time the drive was powered up, a Slot1 Different trip is initiated and then the parameters are transferred from the card. If the parameter file includes the parameters for the newly fitted option module then these are also transferred to the drive and the*Slot1Different* trip is reset. If the parameter file does not include the parameters for the newly fitted option module then the drive does not reset the *Slot1 Different* trip. Once the transfer is complete the drive parameters are saved to non-volatile memory. The trip can be reset either by initiating a drive reset or by powering down and then powering up again.

Pr 11.072 "**NV Media Card Create Special File (RW)**" When set to 1 then a parameter file is transferred to an NV media card the file is created as a macro file. Pr 11.072 is reset to 0 after the file is created or the transfer fails.

Pr 11.075 "***NV Media Card Read-only Flag (RO)"*** shows the state of the read-only flag for the currently fitted card.

Pr 11.077 "***NV Media Card File Required Version (RW)"*** is used as the version number for a file when it is created on an NV media card. Pr 11.077 is reset to 0 when the file is created or the transfer fails.

9.2 M Connect Method for parameter load.

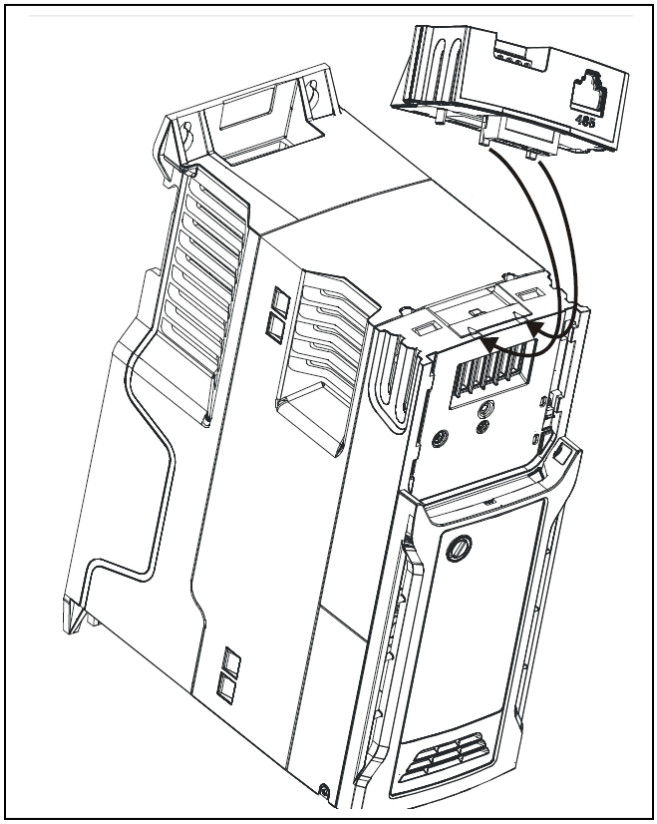

“M400 Simplex Pump Parameter”,Part Number 401849-02 is a parameter file that can be loaded by using the “M Connect” Software load on a PC. This parameter file can be used to reset the drive back to default M400 Simplex Pump parameters (Master M400 Simplex Pump File.par).

You will need to have an AI-485 adaptor and the USB to RS 485 cable.

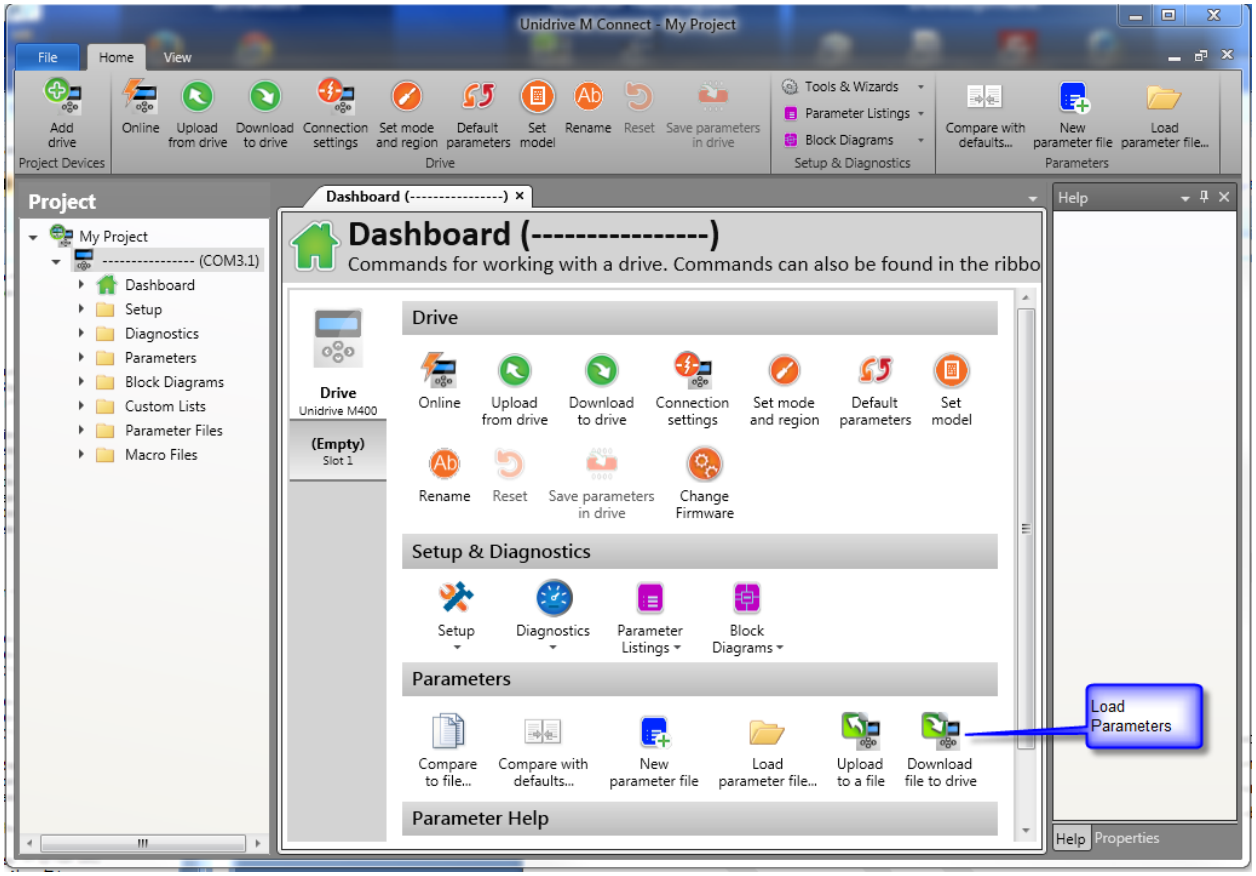

The procedure to restore parameters will be demonstrated in the following pages.

9.2.1 Open M Connect

- Open M Connect
- Use Quick Drive Tasks and Scan For Drives. Should find your M400.
  - Your drive must have a Adaptor Interface (AI-485) Module.
  - Insure your CT comms cable is connected to AI-485.
  - Use Quick Drive Tasks and Check your M Connect Scan settings.
  - When found click on the “Unidrive M400 in the left column.
- Use Quick Drive Tasks and On the dash board, select “Drive to File” or “File to drive”.
  - Upload or download your parameter file.

10 Function Block Diagrams

The block diagrams on the next several pages represent the logical operation of the M400 Simplex Pumping program. The pages are separated in functional categories and each is numbered in the upper left corner. Often there are references to these page numbers from other blocks in the chart and indicated by a bordered number in the lower left corner.

10.1 Diagram 0 Main Pumping Hand/Auto Mode

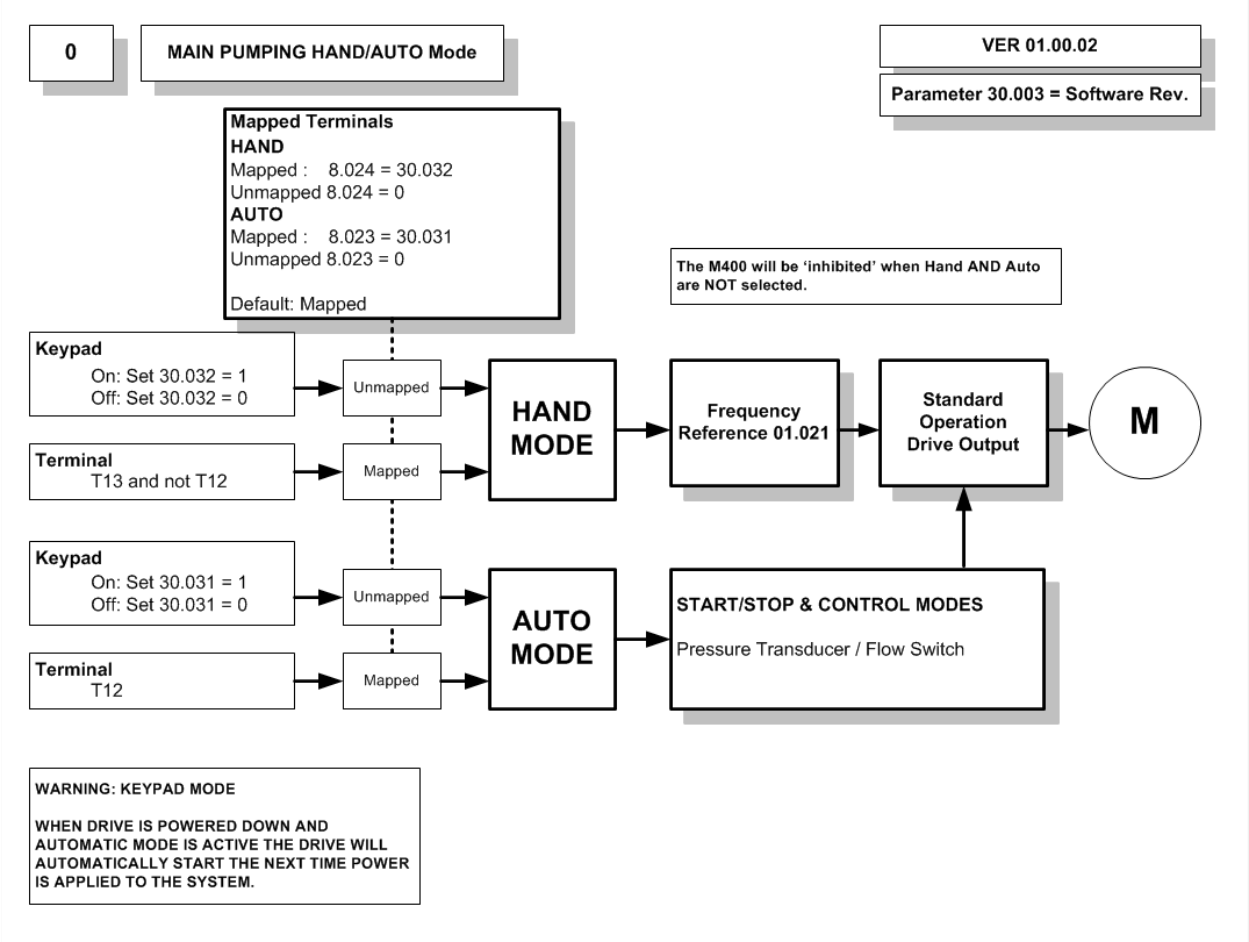

10.2 Diagram 1 Pump Mode

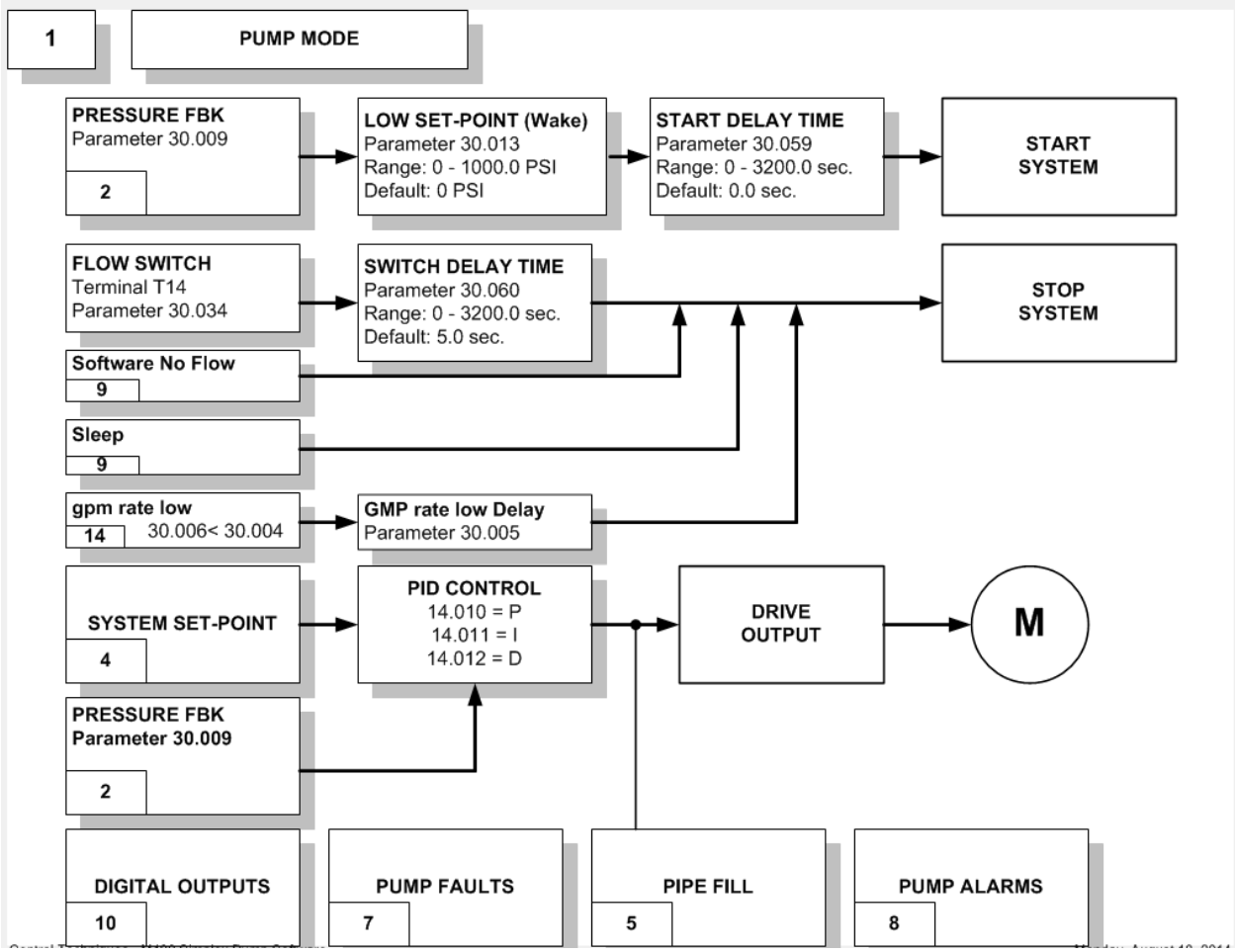

10.3 Diagram 2 Pressure Transducer Scaling

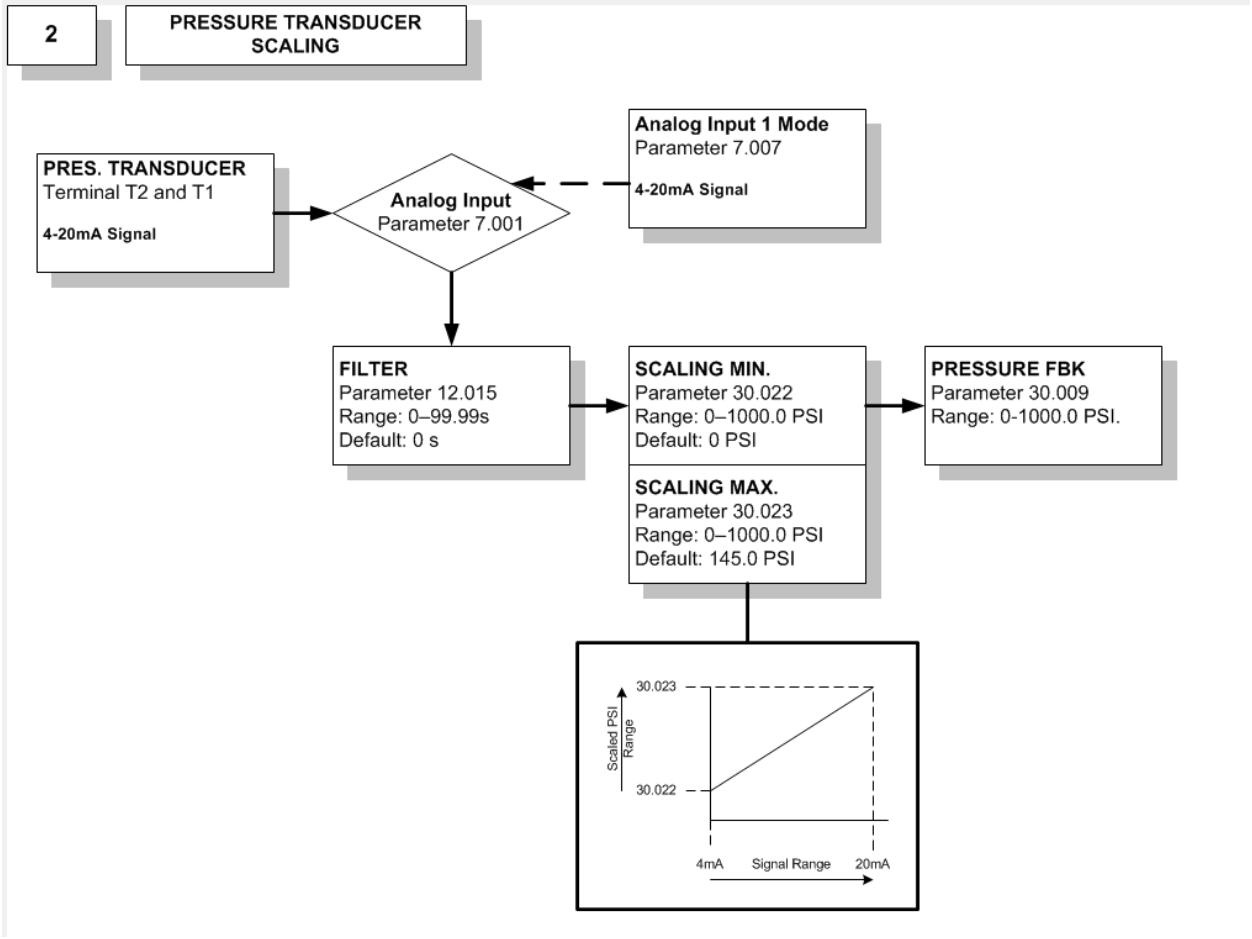

10.4 Diagram 4 Pump System Set-Point

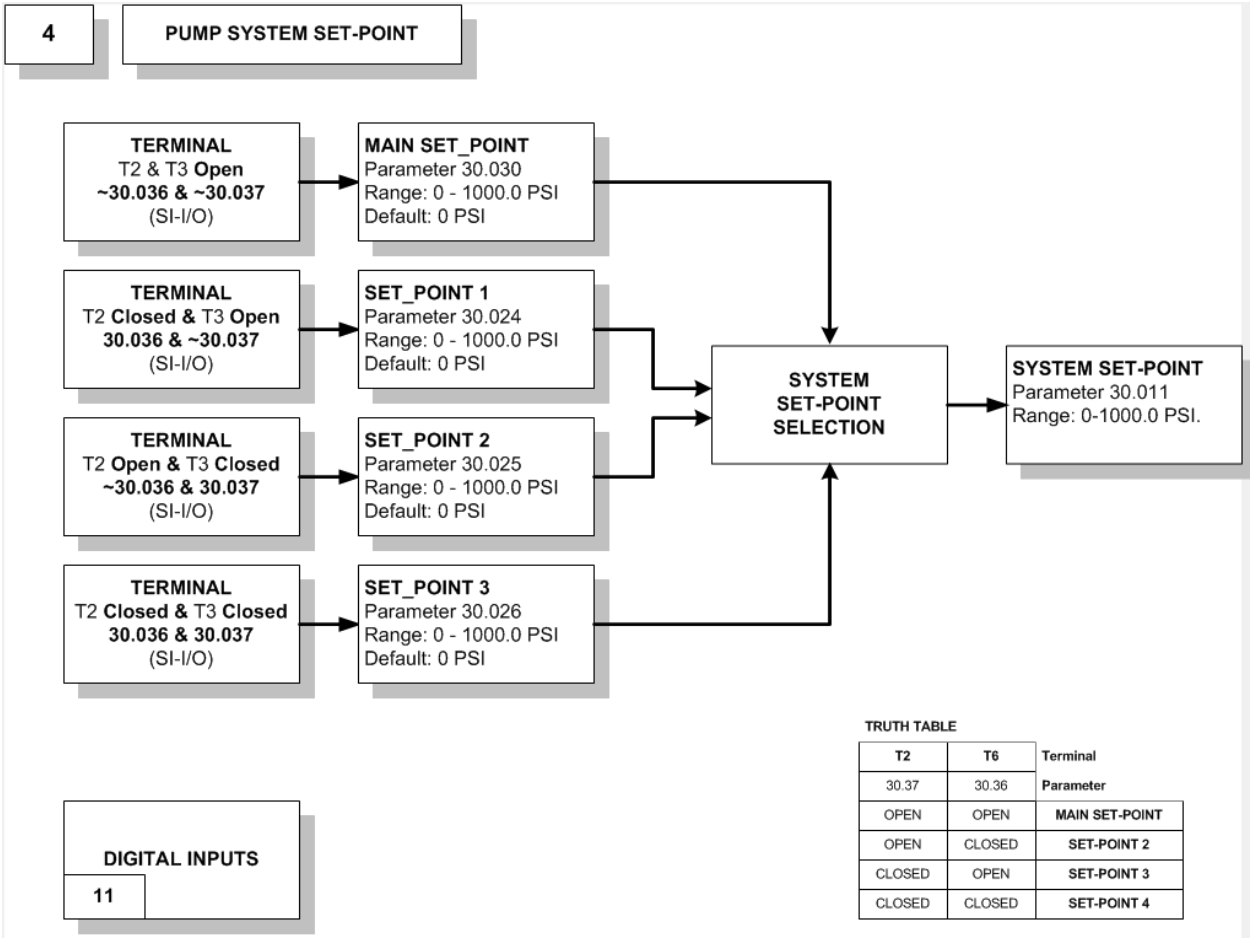

TRUTH TABLE

T2	T6	Terminal
30.37	30.36	Parameter
OPEN	OPEN	MAIN SET-POINT
OPEN	CLOSED	SET-POINT 2
CLOSED	OPEN	SET-POINT 3
CLOSED	CLOSED	SET-POINT 4

10.5 Diagram 5 Pipe Fill Time

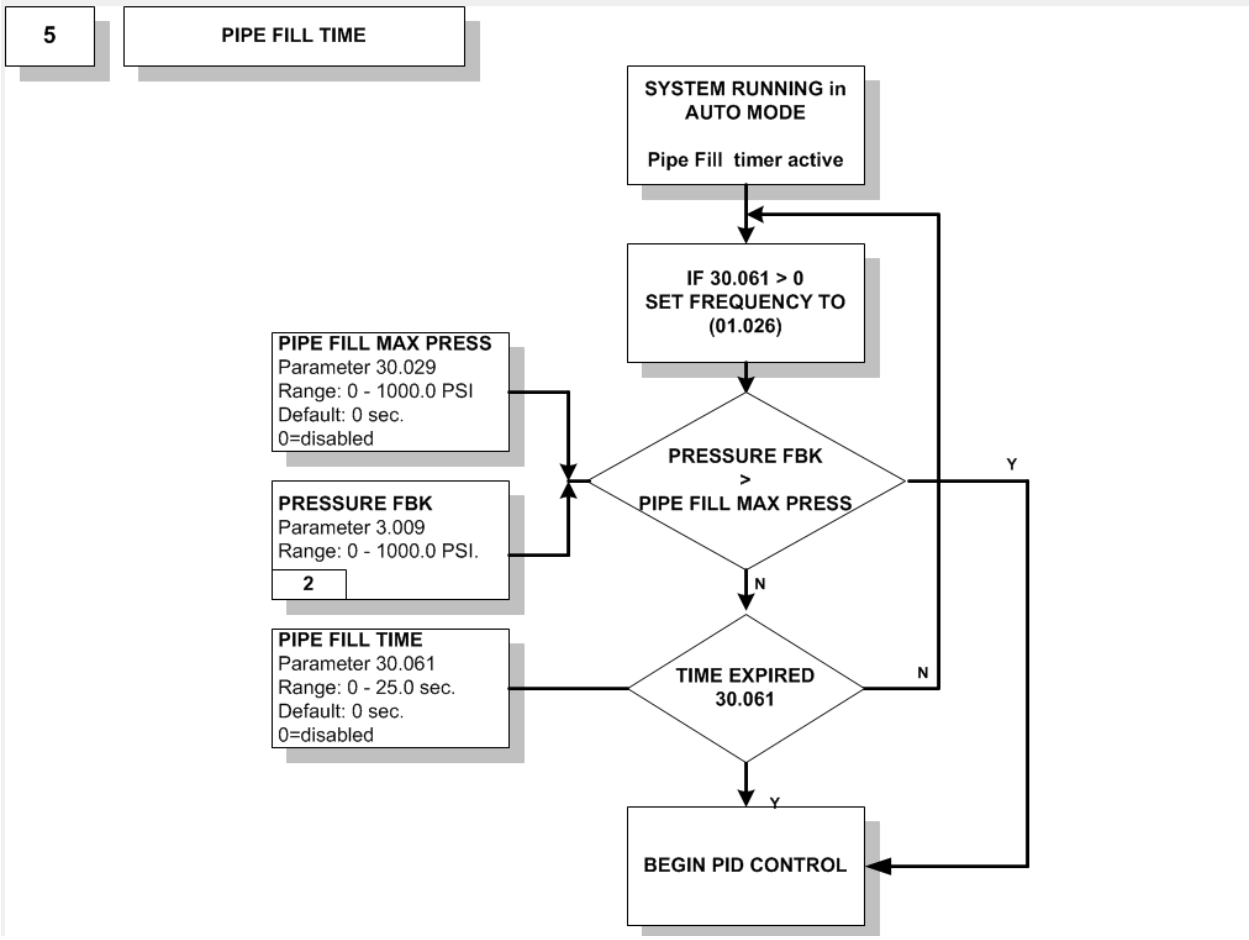

10.6 Diagram 6 AUTO Reset Function

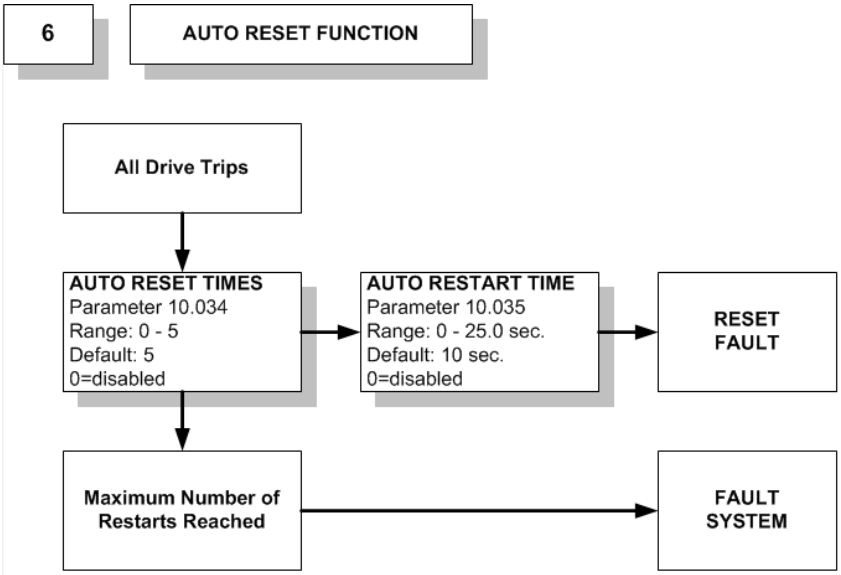

10.7 Diagram 7 Pump Faults

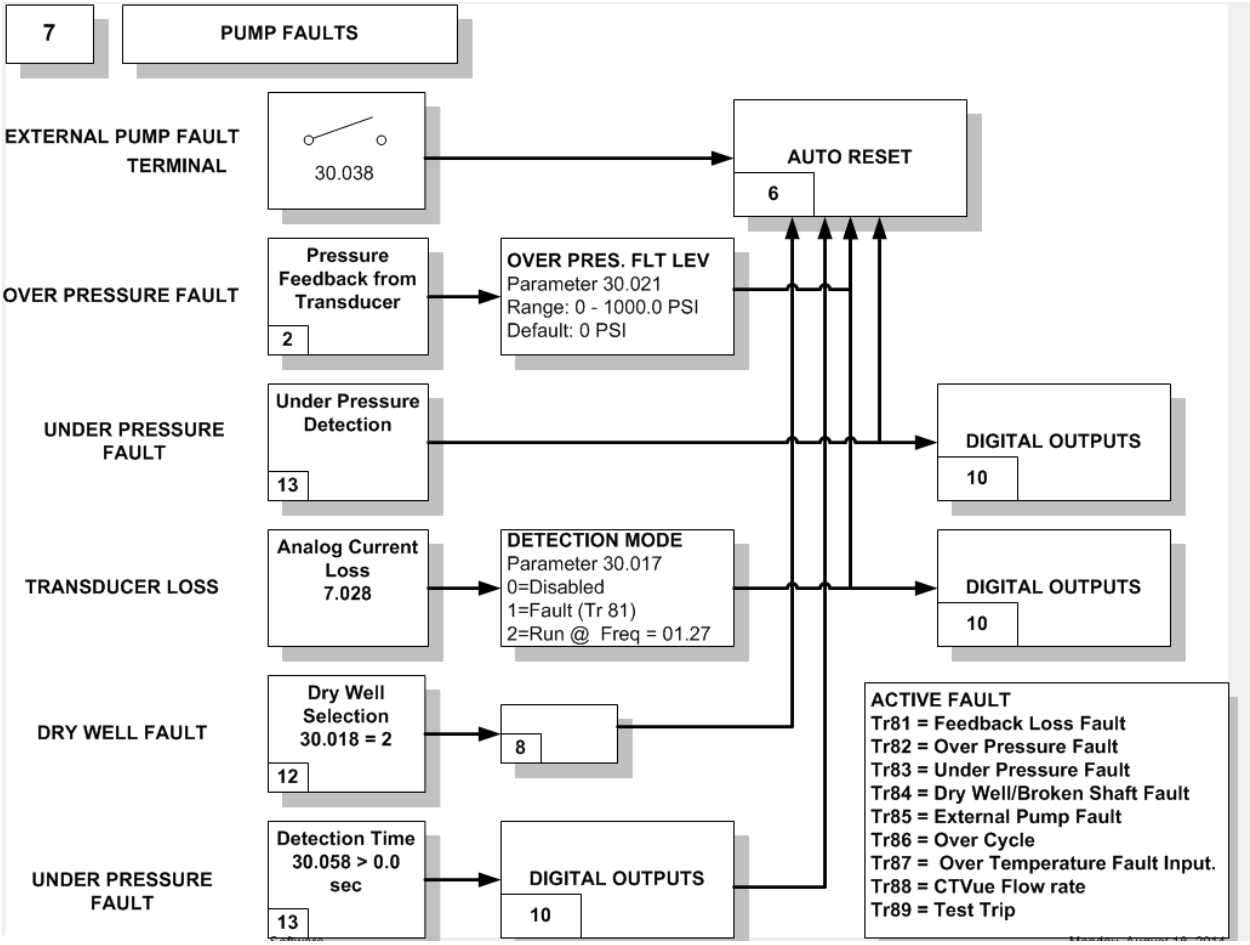

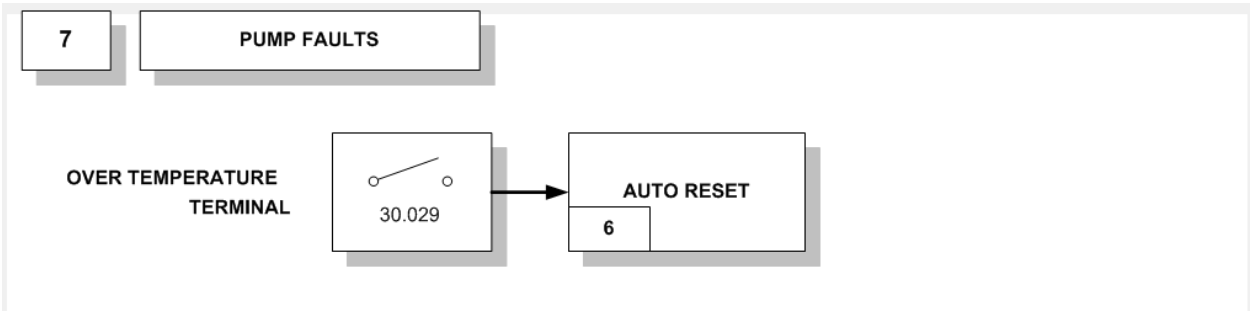

10.8 Diagram 8 Pump Alarms

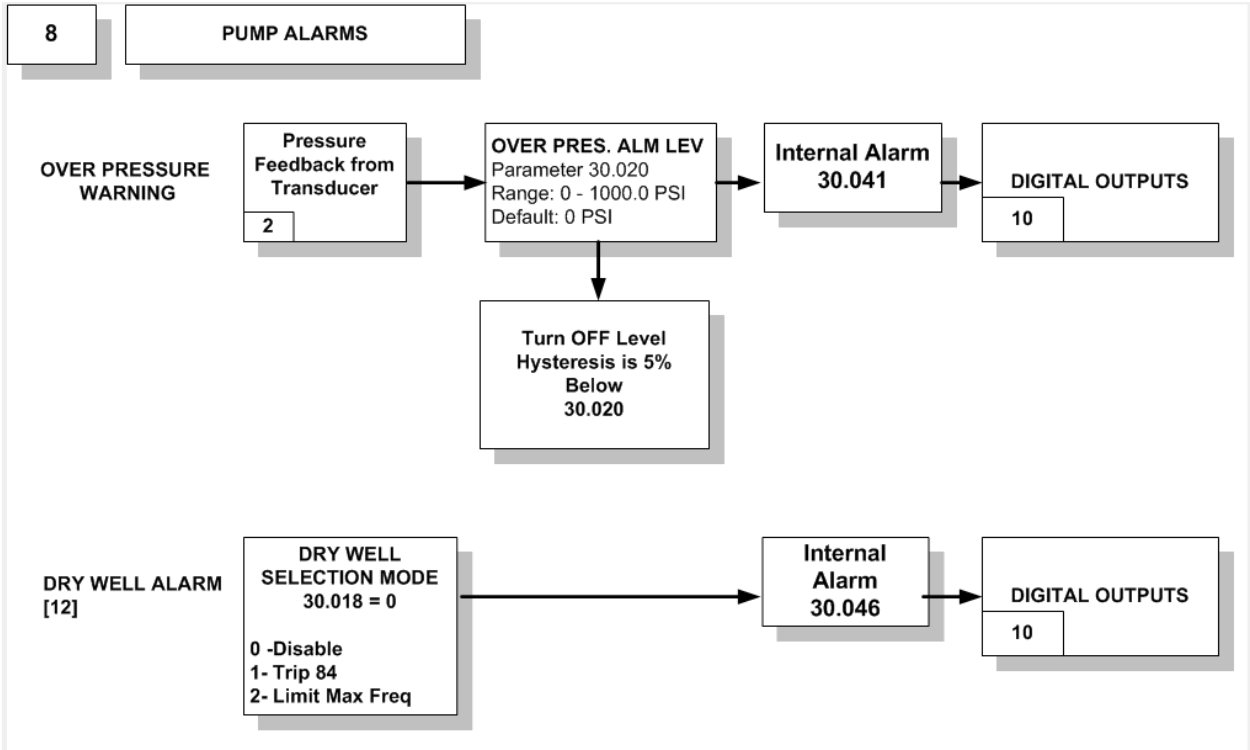

10.9 Diagram 9 No Flow Detection and Sleep

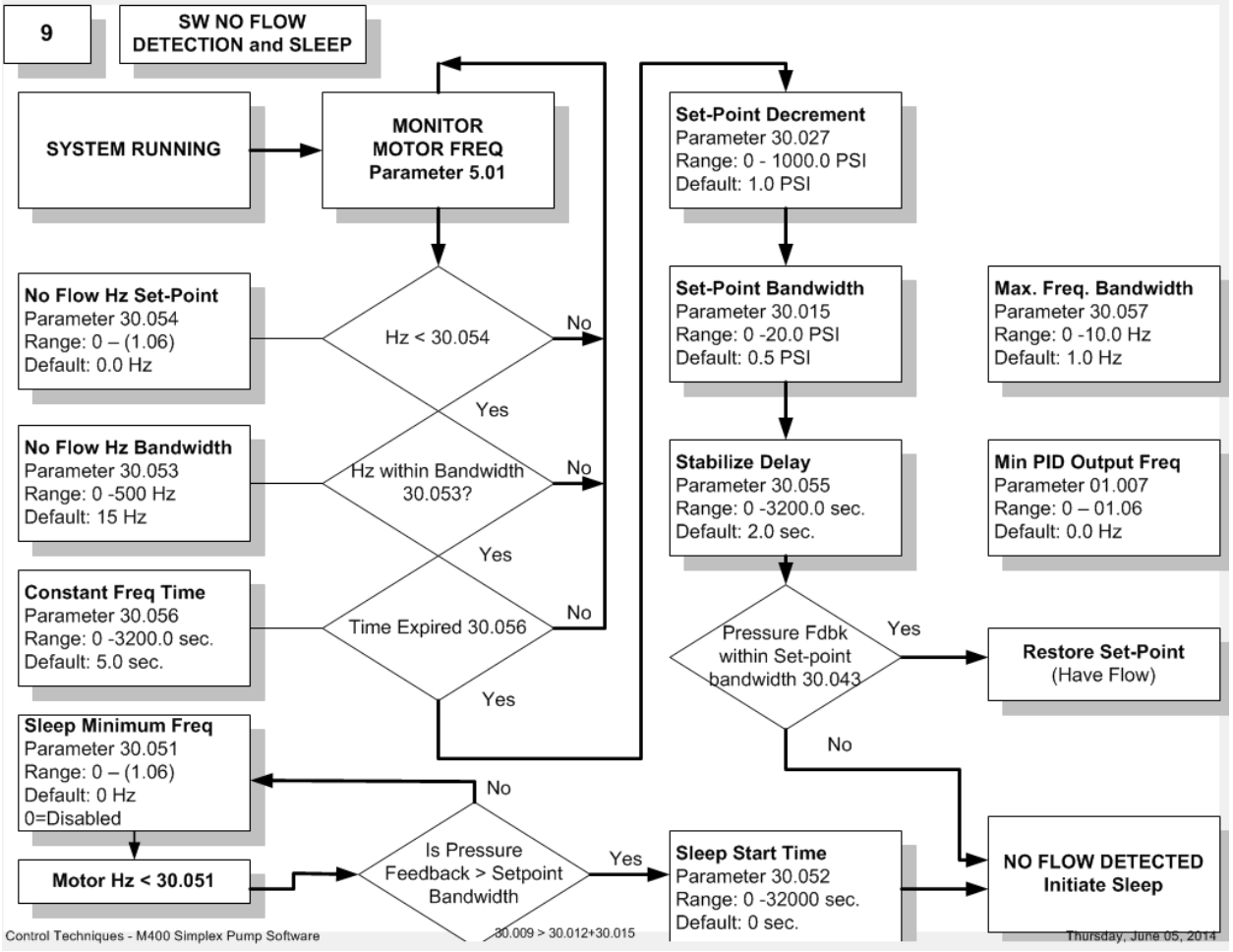

10.10 Diagram 10 Digital Output

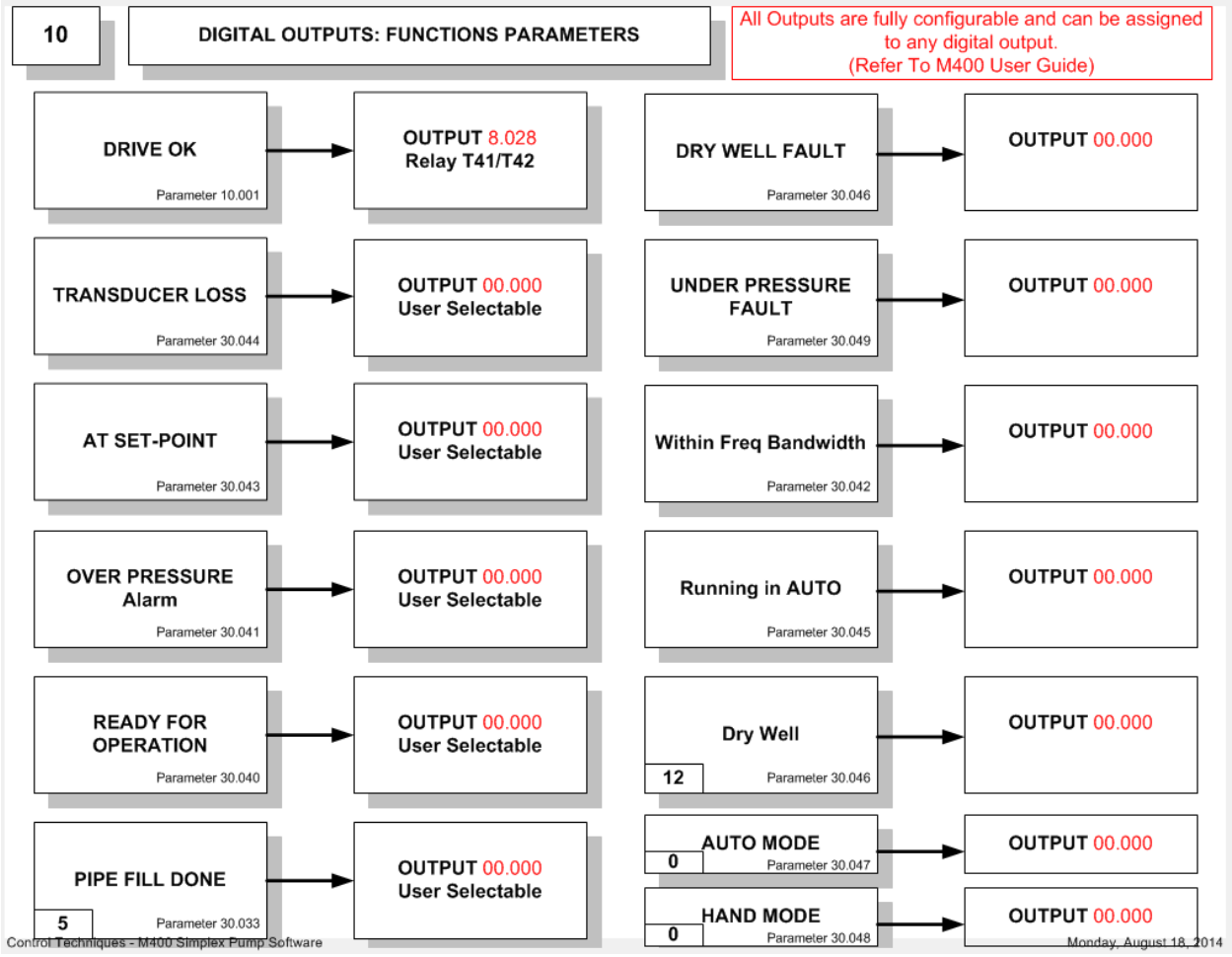

10.11 Diagram 11 Digital Inputs

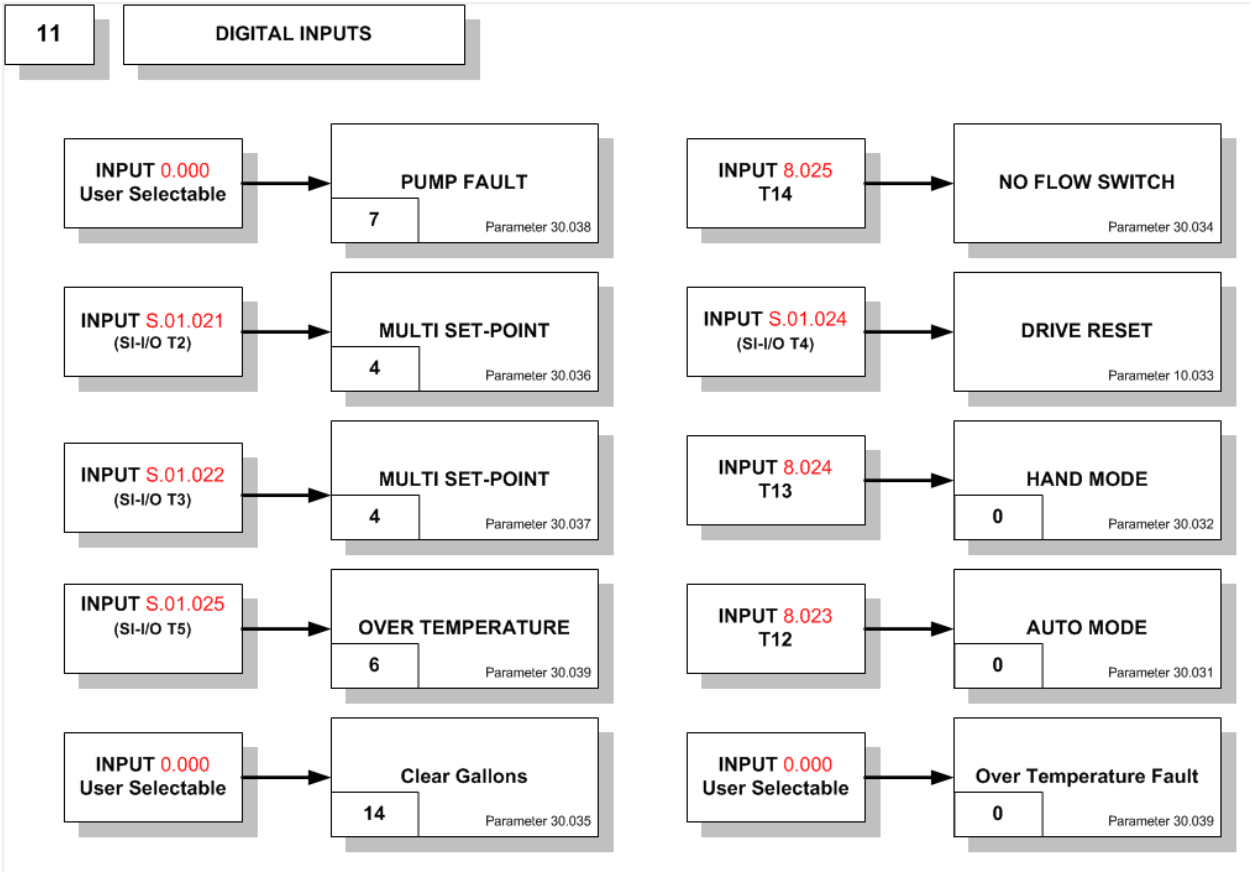

10.12 Diagram 12 Dry Well/Low Suction Detection

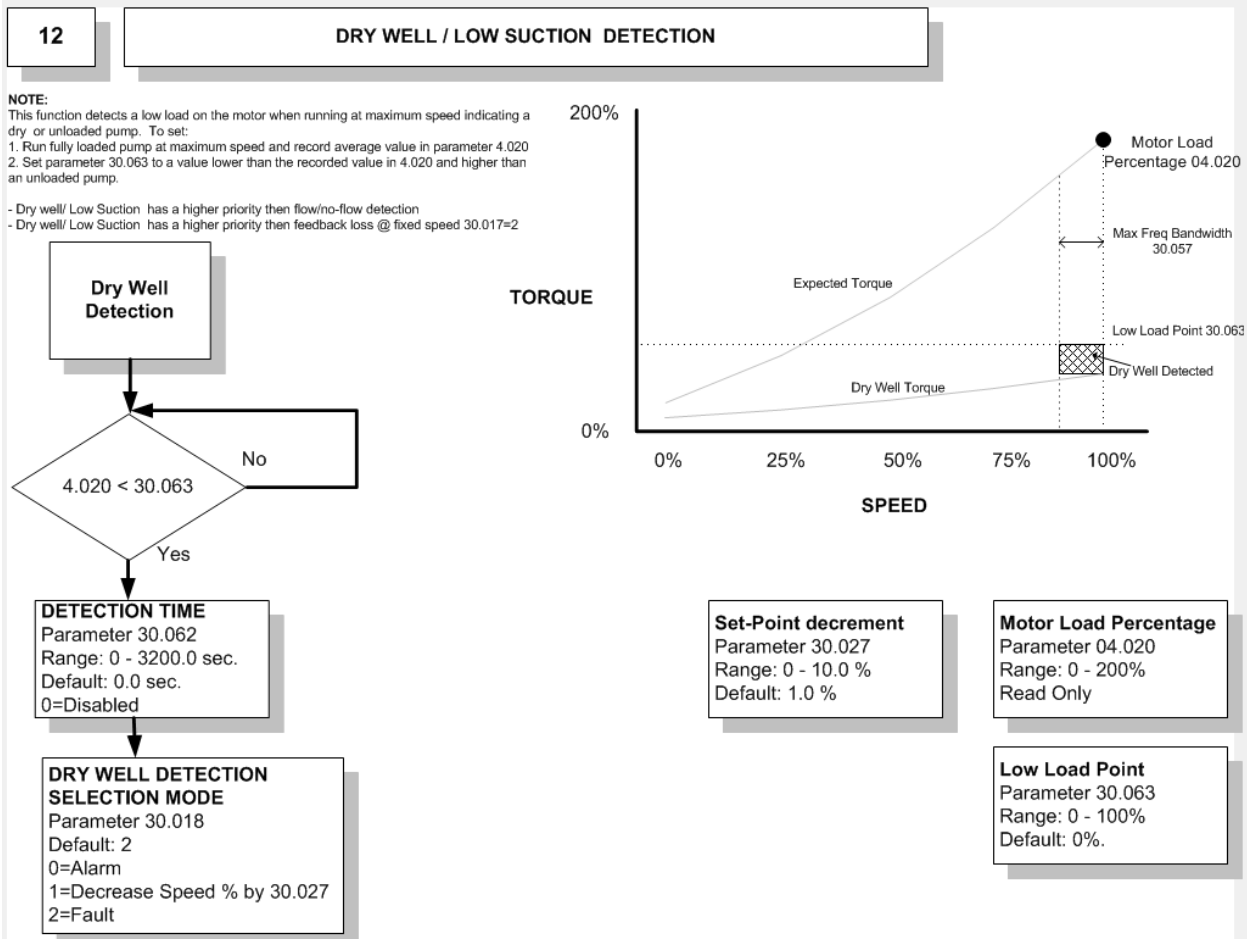

10.13 Diagram 13 Under Pressure Detection

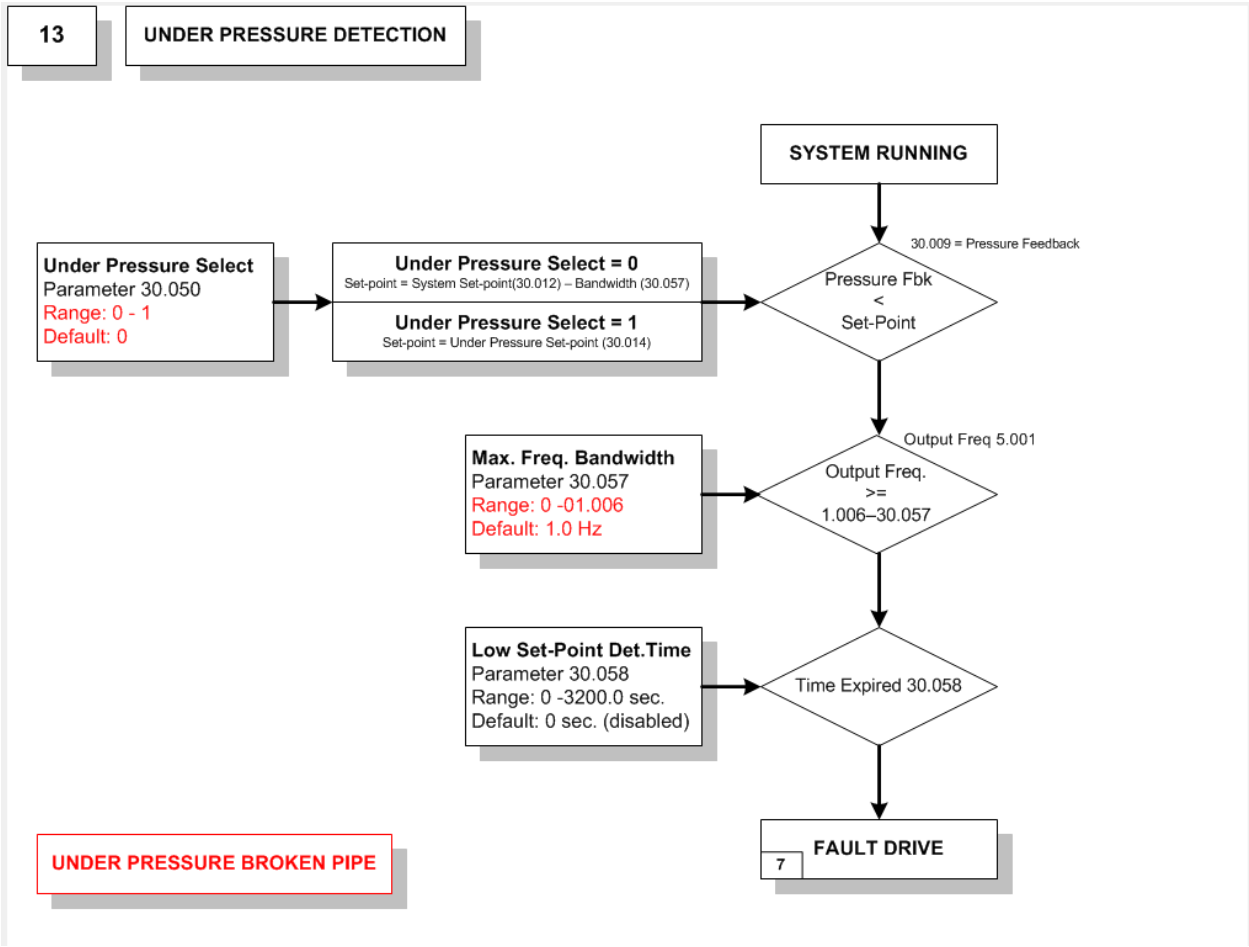

10.14 Diagram 14 Flow Meter

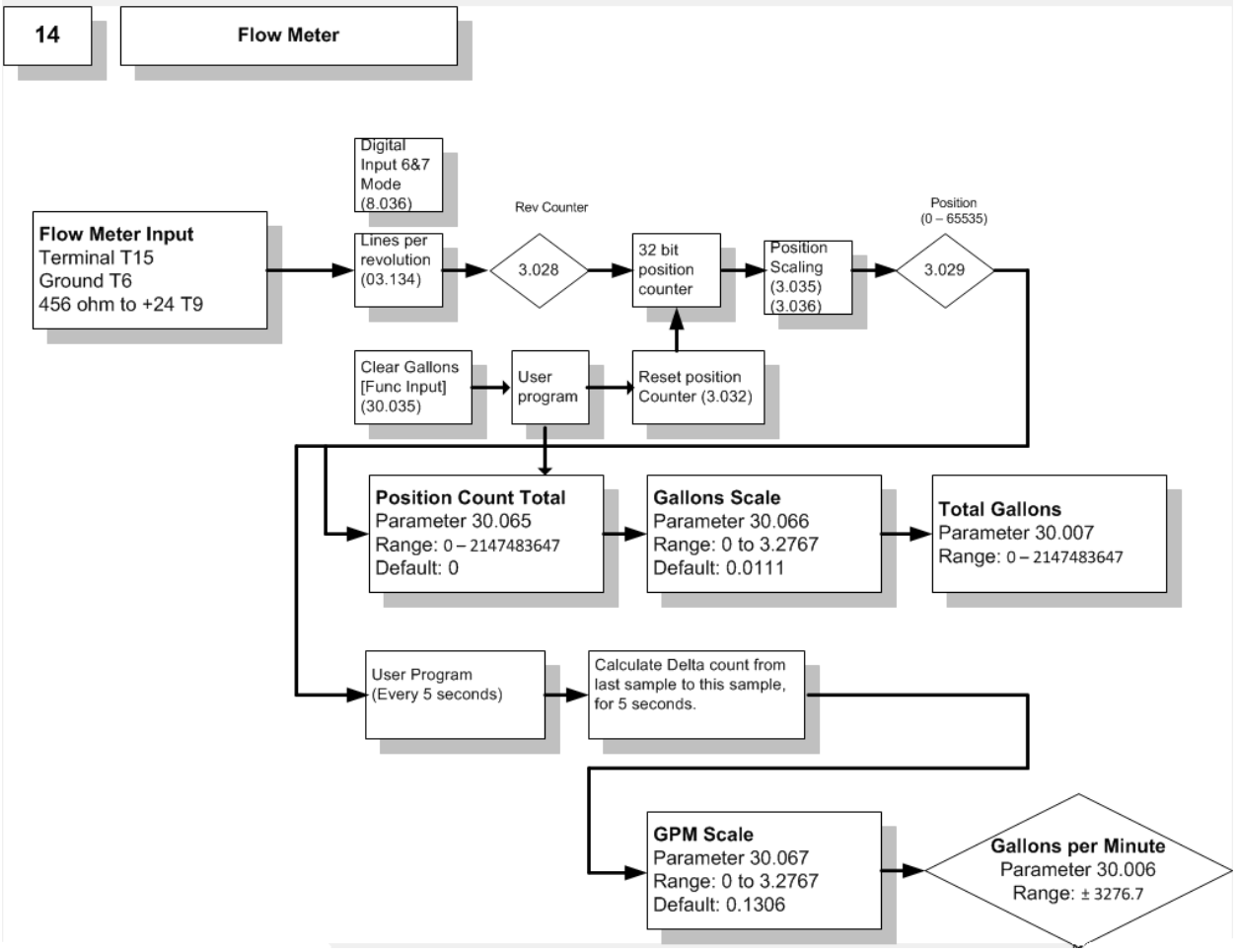

10.15 Diagram 15 Overview - Menu 0

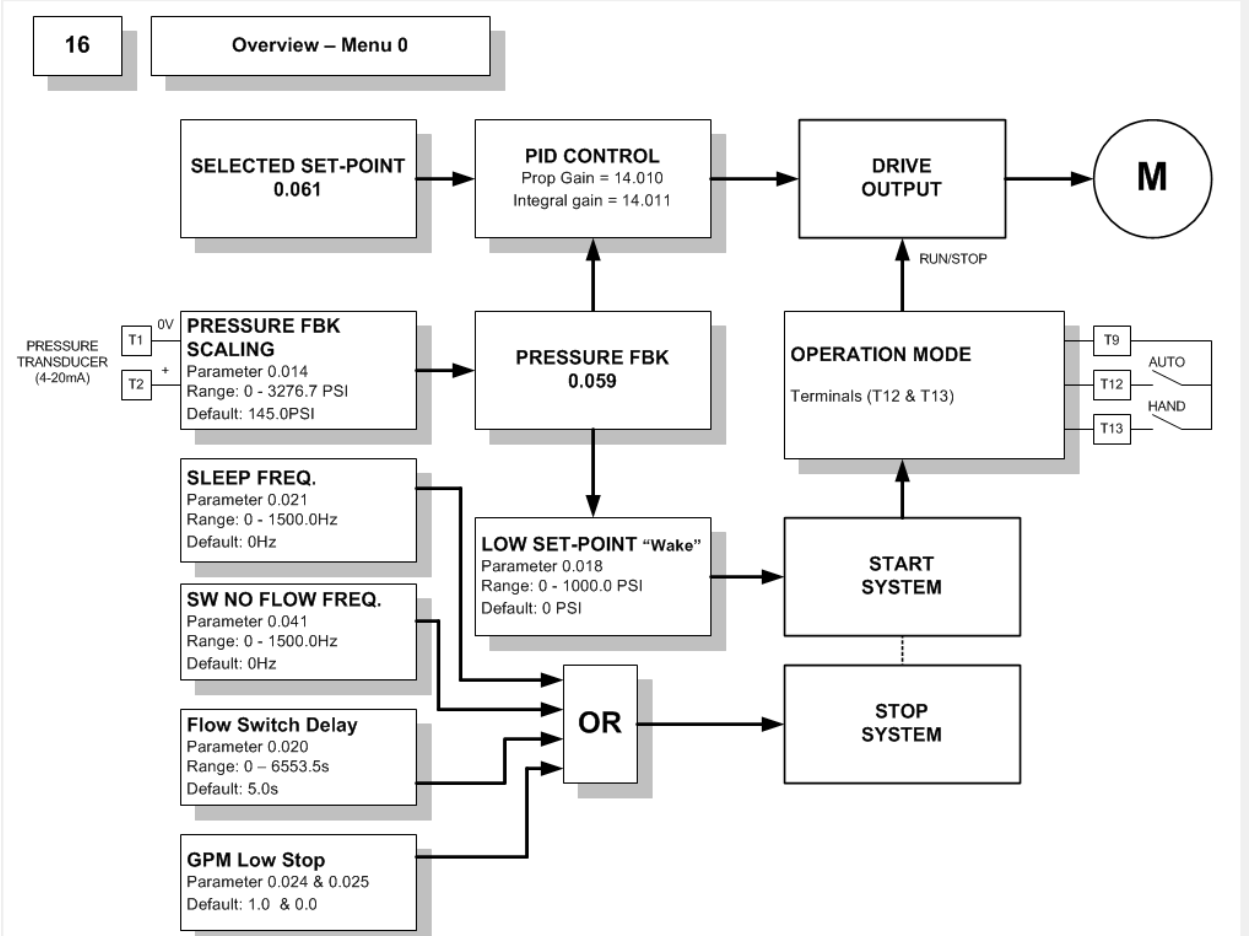

11 Parameter Descriptions

11.1 Other Documentation References

A detailed Parameter reference for the M400 drive can be accessed through "M Connect" parameter help. You must define which drive and mode you are using to access the matching parameter help descriptions. The easiest way is to go on line with your drive. You could also create a project with the model number of your M400. Then you can access detailed parameter descriptions.

11.2 Simplex Pump Specific Parameter Descriptions

Many of the M400 parameters have different functionality than standard when used in the Pump Solution mode. If not listed in the table below the functionality is standard as listed in the M400 Guide.

11.2.1 Using Menu 0 Parameters

For ease of operation, the M400 Simplex Pump parameters are accessible using Menu 0 parameters. They are in order that is recommended for commissioning. See section 14 for the Menu 0 listing.

When changing a parameter in Menu 0, the new value is saved when pressing the Enter button. If parameters have been changed in the advanced menus, then the change will not be saved automatically. A save function must be carried out (Pr 00.000 = 1001).

11.2.2 Summary Advanced Parameters

Parameter	Description	Type	Units	Range	Default
Pr 1.006	Maximum Reference Clamp	RW	Hz	0 to Drive rating	60.00
Pr 1.007	Minimum Reference Clamp	RW	Hz	0 to Drive rating	0.00
Pr 1.021	HAND Mode Speed Selection	RW	Hz	0 to (Pr 1.006)	0.00
Pr 1.026	Pipe Fill Speed setting	RW	Hz	0 to (Pr 1.006)	0.00
Pr 1.027	Transducer Loss Frequency	RW	Hz	0 to (Pr 1.006)	0.00

Parameter	Description	Type	Units	Range	Default
Pr 2.004	Ramp Mode Select	RW	-	0-3	2
Pr 2.021	Acceleration	RW	s		5.0
Pr 2.021	Deceleration	RW	s		10.0

Parameter	Description	Type	Units	Range	Default
Pr 3.029	Position (GPM pulse count)	RO	counts	-	-
Pr 3.032	Position Counter reset	RW		0,1	
Pr 3.035	Position Scaling Numerator	RW		0.000 to 100.000	1.000
Pr 3.036	Position Scaling Denominator	RW		0.000 to 100.000	1.000

Parameter	Description	Type	Units	Range	Default
Pr 4.007	Symmetrical Current Limit	RW	%	-	165.0
Pr 4.015	Motor Thermal Time Constant	RW	s	1 to 3000	179
Pr 4.020	Percentage Load	RO	%	- Decimal 1	-
Pr 4.025	Low Speed thermal Protection mode	RW	-	0,1	0

Parameter	Description	Type	Units	Range	Default
Pr 5.001	Motor Frequency	RO	Hz	0.00 to Drive rating	-
Pr 5.006	Motor Rated Frequency	RW	Hz	0 to Drive rating	0.00
Pr 5.007	Motor Rated Current	RW	Amps	0 to Drive rating	0.00
Pr 5.008	Motor Rated RPM	RW	RPM	0.0 to 80000.0	1800.0
Pr 5.009	Motor Rated Voltage	RW	Volts	Drive rating	
Pr 5.010	Motor Power Factor	RW	-	0-1.00	0.85
Pr 5.011	Number of Motor Poles	RW	-	0 to 16	0
Pr 5.013	Dynamic V to F Select	RW	-	0 to 2	0
Pr 5.014	Voltage Mode Select	RW	-	0 to 5	FD
Pr 5.015	Low Frequency Boost	RW	-	0 to 50.0	3.0
Pr 5.027	Enable Slip Compensation	RW	-	-15.0 to 150.0	100.0

Parameter	Description	Type	Units	Range	Default
Pr 6.012	Enable Stop Key	RW	-	0 to 1	0
Pr 6.015	Drive Enable	RW	-	0 to 1	0
Pr 6.020	Date Format	RW	-	0 to 1	0
Pr 6.024	Reset Energy Meter	RW	-	0 to 1	0
Pr 6.025	Energy Meter MWh	RO	MWh	-999.9 to 999.9	0
Pr 6.026	Energy Meter kWh	RO	kWh	-99.99 to 99.99	0
Pr 6.027	Electricity cost per kWh	RW	-	0 to 600.0	0.0
Pr 6.028	Running Cost	RO	-	-32000 to 32000	0
Pr 6.029	Hardware Enable	RO	-	0 to 1	0
Pr 6.030	Run Forward	RO	-	0 to 1	0

Parameter	Description	Type	Units	Range	Default
Pr 7.007	Analog 1 Input Mode	RW	-	-	4
Pr 7.010	Analog Input 1 Destination	RW	-	-	0
Pr 7.011	Analog Input 2 Mode	RW	-	-	dig
Pr 7.014	Analog Input 2 Destination	RW	-	-	0.000
Pr 7.026	Analog Input 1 Preset on Current Loss	RW	-	4.00 to 20.00	4.00
Pr 7.028	Analog Input 1 Current Loop loss	RO	-	0 to 1	0

Parameter	Description	Type	Units	Range	Default
Pr 8.001	Terminal T10 Status	RO	-	0,1	-
Pr 8.002	Terminal T11 Status	RO	-	0,1	-
Pr 8.003	Terminal T12 Status	RO	-	0,1	-
Pr 8.004	Terminal T13 Status	RO	-	0,1	-
Pr 8.005	Terminal T14 Status	RO	-	0,1	-
Pr 8.006	Terminal T15 Status	RO	-	0,1	-
Pr 8.007	Terminal T16 Status	RO	-	0,1	-
Pr 8.008	Terminal T41/T42 Relay Status	RO	-	0,1	-
Pr 8.011	Terminal T10 Invert	RW	-	0,1	0
Pr 8.012	Terminal T11 Invert	RW	-	0,1	0
Pr 8.013	Terminal T12 Invert	RW	-	0,1	0
Pr 8.014	Terminal T13 Invert	RW	-	0,1	0
Pr 8.015	Terminal T14 Invert	RW	-	0,1	0

Parameter	Description	Type	Units	Range	Default
Pr 8.016	Terminal T15 Invert	RW	-	0,1	0
Pr 8.017	Terminal T16 Invert	RW	-	0,1	0
Pr 8.018	Terminal T41/42 Invert	RW	-	0,1	0
Pr 8.021	Terminal T10 Destination	RW	-	-	0.000
Pr 8.022	Terminal T11 Destination	RW	-	-	0.000
Pr 8.023	Terminal T12 Destination	RW	-	-	30.031
Pr 8.024	Terminal T13 Destination	RW	-	-	30.032
Pr 8.025	Terminal T14 Destination	RW	-	-	30.034
Pr 8.026	Terminal T15 Destination	RW	-		0.000
Pr 8.027	Terminal T16 Destination	RW	-		0.000
Pr 8.028	Terminal T41/42 Relay Source	RW	-		0
Pr 8.031	Terminal T10 Output Select	RW	-	0-Input, 1-Output	1
Pr 8.032	Terminal T11 Output Select	RW	-	0-Input, 1-Output	0
Pr 8.035	Terminal T14 Output Select	RW	-	0-Input, 1-Therm.	0
Pr 8.036	Terminal T15 Output Select	RW	-	0-Input, 1-Freq	1
Pr 8.039	STO Input 1 State	RO	-	0,1	-

Parameter	Description	Type	Units	Range	Default
Pr 10.001	System Fault Status	RO	-	0,1	-
Pr 10.002	Drive Active	RO	-	0,1	-
Pr 10.20	Last Trip	RO	-	-	-
Pr 10.021 Pr 10.029	Trip log entries	RO	-	-	-
Pr 10.033	Drive Reset	RW	-	0,1	0
Pr 10.034	Auto Reset Times	RW	-	0-5	5
Pr 10.035	Auto Restart Time	RW	sec	0-25.0	10
Pr 10.038	User Trip	RW	-	0 to 255	-
Pr 10.040	Status Word	RO	-	0 to 32767	-
Pr 10.041 - Pr 10.060	Trip Log date and times.	RO	-	-	-
Pr 10.070 - Pr 10.079	Trip Log Sub trip numbers	RO	-	-	-

Parameter	Description	Type	Units	Range	Default
Pr 11.019	Status Mode Parameter	RW		0 to 30.999	30.002
Pr 11.031	User Drive Mode	RW	-	1 Open Loop 2 RFC-A	1
Pr 11.044	Security Status	RW	-	0 to 5	1- All Menus
Pr 11.047	PLC Ladder Program Enable	RW	-	0,1	Run

Parameter	Description	Type	Units	Range	Default
Pr 12.008	Variable Selector 1 Source 1	RW	-	-	7.01
Pr 12.010	Variable Selector 1 Mode	RW	-	-	0
Pr 12.015	Pressure Transducer Filter	RW	sec	0-99.99	0

Parameter	Description	Type	Units	Range	Default
Pr 14.002	PID Main Reference Source	RW	-	-	0
Pr 14.003	PID Reference Source	RW	-	-	18.011
Pr 14.004	PID Feedback Source	RW	-	-	12.012
Pr 14.005	PID Ref Invert	RW	-	0,1	0
Pr 14.006	PID Fbk Invert	RW	-	0,1	0
Pr 14.010	Proportional Gain	RW	Gain	0-4.000	1
Pr 14.011	Integral Time	RW	sec	0-4.000	0.5
Pr 14.012	Differential Rate	RW	d/dt	0-4.000	0
Pr 14.013	PID Upper Limit	RW	%	0 to 100.00	100.00
Pr 14.014	PID Lower Limit	RW	%	+/-100.00	0
Pr 14.016	PID Output Destination	RW	-	-	1.036

Parameter	Description	Type	Units	Range	Default
Pr 18.001	For Program Use (NV)	RO	-	+/-32767	-
Pr 18.011	Scaled Setpoint for PID	RO	P.U.	+/-32767	-
Pr 18.012	Functional States Bitmap	RO	-	16 bits	-
Pr 18.013	Over Cycle mode [0-Disables, 1- trip, 2 – increment PSI setpoint]	RW	-	0 to 2	0
Pr 18.014	Over cycle max cycles in one hour	RW	-	+/-32767	
Pr 18.031	CTVue Timed Valve #1	RW		0,1	
Pr 18.032	CTVue Timed Valve #2	RW		0,1	
Pr 18.033	CTVue – Alert Flow out of Bandwidth	RW		0,1	

Parameter	Description	Type	Units	Range	Default
Pr 22.052 Pr 22.074	Define/Map Menu 0				

Parameter	Description	Type	Units	Range	Default
Pr 30.003	Software Version 0 sets defaults	RW	-	0 to 65535	-
Pr 30.004	GPM Low Stop	RW	gpm		
Pr 30.005	GPM Low Stop Delay	RW	sec		
Pr 30.006	GPM	RO	gpm		-
Pr 30.007	Gallons	RO	gal	-2147483648 2147483647	-
Pr 30.009	Pressure Feedback Value	RO	PSI	0 to 6553.5	-
Pr 30.010	PID Error	RO	PSI	+/-3276.7	-
Pr 30.011	Pressure Selected Setpoint Value	RO	PSI	0 to 6553.5	-
Pr 30.012	Pressure Final Setpoint (No Flow adjusted)	RO	PSI	0 to 6553.5	-
Pr 30.013	Pressure Low Setpoint “Wake”	RW	PSI	0 to 6553.5	0.0
Pr 30.014	Under Pressure Level	RW	PSI	0 to 6553.5	0.0
Pr 30.015	Pressure Setpoint Bandwidth	RW	PSI	0 to 25.5	0.5
Pr 30.017	Transducer Loss Action	RW	-	0 to 2	1(Trip)
Pr 30.018	Dry Well Selection Mode	RW	-	0 to 2	2 (Trip)
Pr 30.020	Over Pressure Alarm Level	RW	PSI	0 to 6553.5	0.0

Parameter	Description	Type	Units	Range	Default
Pr 30.021	Over Pressure Fault Level	RW	PSI	0 to 6553.5	0.0
Pr 30.022	Minimum Feedback Scaling	RW	PSI	0 to 6553.5	0.0
Pr 30.023	Maximum Feedback Scaling	RW	PSI	0 to 6553.5	145.0
Pr 30.024	Alternate Set-point 1	RW	PSI	0 to 6553.5	0.0
Pr 30.025	Alternate Set-point 2	RW	PSI	0 to 6553.5	0.0
Pr 30.026	Alternate Set-point 3	RW	PSI	0 to 6553.5	0.0
Pr 30.027	Set-point Decrement	RW	PSI	0 to 25.5	1.0
Pr 30.029	PipeFillMaxPressure	RO	PSI	0 to 6553.5	0.0
Pr 30.030	Main Set-point	RW	PSI	0 to 6553.5	0.0
Pr 30.031	AUTO Mode Select Input	RW	-	0-1	0
Pr 30.032	HAND Mode Select Input	RW	-	0-1	0
Pr 30.033	Pipe Fill Done Output	RO	-	0-1	0
Pr 30.034	Flow Switch Input	RW	-	0-1	0
Pr 30.035	Clear Gallons Input	RW	-	0-1	0
Pr 30.036	Multi-set p1 Input	RW	-	0-1	0
Pr 30.037	Multi-set p2 Input	RW	-	0-1	0
Pr 30.038	Pump Fault Input	RW	-	0-1	0
Pr 30.039	Over Temperature Input	RW	-	0-1	1
Pr 30.040	System Ready Output	RO	-	0-1	0
Pr 30.041	Overpressure Alarm Output	RO	-	0-1	0
Pr 30.042	Within Max Freq. Bandwidth Output	RO	-	0-1	0
Pr 30.043	AT Reference Digital Output	RO	-	0-1	0
Pr 30.044	Transducer Loss Digital Output	RO	-	0-1	0
Pr 30.045	Drive Running In AUTO Output	RO	-	0-1	0
Pr 30.046	Dry Well/Low Suction Output	RO	-	0-1	0
Pr 30.047	AUTO Mode Selected Output	RO	-	0-1	0
Pr 30.048	HAND Mode Selected Output	RO	-	0-1	0
Pr 30.049	Under Pressure Fault Output	RO	-	0-1	0
Pr 30.050	Under Pressure Mode	RW	-	0-1	0
Pr 30.051	Minimum Sleep Speed/Freq	RW	Hz	0 to 655.35	0
Pr 30.052	Sleep Start Time	RW	sec	0 to 6553.5	0
Pr 30.053	No Flow RPM (Freq) Bandwidth	RW	Hz	0 to 655.35	15
Pr 30.054	No Flow RPM (Freq) Setpoint	RW	Hz	0 to 655.35	0
Pr 30.055	No Flow Stabilize Delay	RW	sec	0 to 6553.5	2.0
Pr 30.056	No Flow Constant Freq. Time	RW	sec	0 to 6553.5	0
Pr 30.057	Max. Frequency Bandwidth	RW	Hz	0 to 655.35	1.00
Pr 30.058	Under Pressure Detect Time	RW	sec	0 to 6553.5	0.0
Pr 30.059	Start Delay Time	RW	sec	0 to 6553.5	0.0
Pr 30.060	No Flow Switch Delay	RW	sec	0 to 6553.5	5.0
Pr 30.061	Pipe Fill Time	RW	sec	0 to 6553.5	0.0
Pr 30.062	Dry Well Detection Delay	RW	sec	0 to 6553.5	0.0
Pr 30.063	Speed/Torque Low Load Point	RW	%	0 to 100.0	0.0
Pr 30.064	Low Suction Frequency Decrement	RW	%	0 to 100.00	0.00
Pr 30.065	Position Count Total (Gallon pulse count)	RO	-	0 to 2147483647	-
Pr 30.066	Gallons Scale	RW	.0001	0 to32767	0
Pr 30.067	GPM Scale	RW	.001	0 to 32767	0
Pr 30.068	Over Cycle Increment	RW			
Pr 30.069	Max Over Cycle Increment	RW			
Pr 30.070	External Pump Enable	RW		0 to 1	1

Parameter	Description	Units	Range	Drive Default	Pump Default
Pr S.01.011	T2 Digital I/O 1 Mode (0-In. 1-Out)		0,1	0	
Pr S.01.012	T3 Digital I/O 2 Mode (0-In. 1-Out)		0,1	0	
Pr S.01.013	T4 Digital I/O 3 Mode (0-In. 1-Out)		0,1	0	
Pr S.01.014	T5 Digital I/O 4 Mode (0-In. 1-Out)		0,1	0	
Pr S.01.015	T7 Input 5/AI Mode (0-In. 1-AI)		0,1	1	
Pr S.01.016	T8 Input 6/AI Mode (0-In. 1-AI)		0,1	1	
Pr S.01.017	T9 Input 7/AI Mode (0-In. more)		0 to 11	1	
Pr S.01.017	T11 Input 7/AI Mode (0-In. more)		0 to 5	1	
Pr S.02.011	T2 Digital I/O 1 Invert		0,1	0	
Pr S.02.012	T3 Digital I/O 2 Invert		0,1	0	
Pr S.02.013	T4 Digital I/O 3 Invert		0,1	0	
Pr S.02.014	T5 Digital I/O 4 Invert		0,1	0	
Pr S.02.015	T7 Input 5 Invert		0,1	0	
Pr S.02.016	T8 Input 6I Invert		0,1	0	
Pr S.02.017	T9 Input 7 Invert		0,1	0	
Pr S.02.018	T11 Input 8 Invert		0,1	0	
Pr S.02.019	T21/T22 Relay 1 Invert		0,1	0	
Pr S.02.020	T23/T22 Relay 2 Invert		0,1	0	
Pr S.02.021	T2 Digital I/O 1 Dest/Source	-		0	
Pr S.02.022	T3 Digital I/O 2 Dest/Source	-		0	
Pr S.02.023	T4 Digital I/O 3 Dest/Source	-		0	
Pr S.02.024	T5 Digital I/O 4 Dest/Source	-		0	
Pr S.02.025	T7 Digital In 5 AI 1 Destination			0	
Pr S.02.026	T8 Digital In 6 AI 2 Destination			0	
Pr S.02.027	T9 Digital In 7 AI 3 Destination			0	
Pr S.02.028	T11 Digital In 8 AO Source			0	
Pr S.02.029	T21/T22 Relay 1 Source			0	
Pr S.02.030	T23/T22 Relay 2 Source			0	

11.2.3 Advanced Parameters

NOTE: Menu 1 through Menu 21 are only accessible via Keypad if the Security codes are set up to allow it.

NOTE: The "Default" signifies the factory default for the M400 drive. (App Init= xx) signifies the Simplex Pump application override default for that parameter. Simplex Pump Defaults are set when the Pump Version (Pr 30.003) is set to zero. The simplex pump application will then write the pump defaults. This action is automatically taken if you set Load US Defaults (Pr 00.000 = 1244). This provides a base from which to create parameter files that match your system needs. The loading of parameter files afterwards will overwrite these defaults.

NOTE: Parameter files provide the final Simplex Pump default settings. Those settings are not shown in this document.

11.2.3.1 References, Menu 1

Pr	Function	Range	Units	Default	Type
1.006 (Pr 0.002)	Maximum Reference Clamp	0 - 1500.00	Hz	60.00	RW

This is the maximum motor operating frequency (motor speed). This provides a limit on the maximum operating motor reference frequency in the drive.

Pr	Function	Range	Units	Default	Type
1.007 (Pr 0.001)	Minimum Reference Clamp	0 - 1500.00	Hz	0.00	RW

This is the minimum motor operating frequency (motor speed) when the internal run command is issued. This provides a limit on the minimum operating motor reference frequency in the drive. The motor will not run slower than this except for a dead stop.

Some motors require a minimum speed to cool and lubricate thrust bearings. Set the minimum motor speed to support these types of bearings.

Pr	Function	Range	Units	Default	Type
1.021 (Pr 0.023)	HAND Mode Speed Setting	0 to Maximum Speed set in Pr 1.006	Hz	(App Init=60.00)	RW

Sets the fixed frequency that the motor will run when running in HAND Mode.

Pr	Function	Range	Units	Default	Type
1.026 (Pr 0.035)	Pipe Fill Speed setting	0 to Maximum Speed set in Pr 02	Hz	(App Init =55.00)	RW

Sets the fixed frequency that the motor will run when doing a Pipe Fill. Pipe Fill runs at the start of a pump and for a time specified in Pr 30.061. Pipe Fill can be stopped earlier with the Pipe fill Max pressure(30.029)

Warning

Use caution when setting Pipe Fill Speed and Delay(Pr 30.061). The pressure transducer is ignored which may cause an over pressure condition if the time value is too long and the speed too high. When using this feature it is highly recommended to enable the over pressure fault detection or the Pipe Fill Max pressure.

Pr	Function	Range	Units	Default	Type
1.027 (Pr 0.016)	Transducer Loss Speed setting	0 to Maximum Speed set in Pr 02	Hz	(App Init = 0.00)	RW

Sets the fixed frequency that the motor will run when Transducer Loss is detected (07.028) and Transducer loss action(Pr 30.017) = 2 [0 –Disabled,1- Fault Drive,2- Run at Set Speed].

Warning

Use caution when setting Transducer Loss. The pressure transducer is broken which results in the pressure feedback reading zero. Running the pump without a pressure transducer may cause an over pressure condition. When using this feature it is highly recommended that a Flow Switch, redundant to the transducer, is used to stop the motor on a No Flow condition. Pumping during no flow could potentially cause an over pressure condition.

11.2.3.2 Ramps, Menu 2

Pr	Function	Range	Units	Default	Type
2.004	Ramp Mode Select	0 – 3	-	(App Init = 2)	RW

This is an advanced settings for acceleration and deceleration.

0. Fast Ramp
1. Standard Ramp with normal motor voltage boost
2. Standard Ramp with motor voltage boost
3. Fast Ramp with motor voltage boost

Pr	Function	Range	Units	Default	Type
2.011 (Pr 0.003)	Acceleration	0.0 to 3200.0	s	5.0	RW

Defines the acceleration rate of the motor in seconds per 100 Hz. Too high of a setting will result in a slow responding PID loop and may cause other time sensitive diagnostic routines issues.

Insure the Acceleration is fast enough to support thrust bearing if used and slow enough to reduce water hammering.

Pr	Function	Range	Units	Default	Type
2.021 (Pr 0.004)	Deceleration	0.0 to 3200.0	s	10.0	RW

Defines the deceleration rate of the motor in seconds per 100Hz. Too high of a setting will result in a slow responding PID loop and may cause other time sensitive diagnostic routines issues.

11.2.3.3 Counters, Menu 3

Pr	Function	Range	Units	Default	Type
3.029	Position	0 to 65535	counts	0	R0

Used internally for gallons count.

Pr	Function	Range	Units	Default	Type
3.032	Position Count reset	0 to 1	-	0	RW

Used internally for gallons count.

Pr	Function	Range	Units	Default	Type
3.035	Position Scaling Numerator	0 to 1.000	-	1.000	RW

Used internally for gallons count. Set to 1.000

Pr	Function	Range	Units	Default	Type
3.036	Position Scaling Denominator	0 to 100.000	-	1.000	RW

Used internally for gallons count. Set to 1.000

11.2.3.4 Current Control, Menu 4

Pr	Function	Range	Units	Default	Type
4.001 (Pr 0.058)	Current Magnitude	-9999.99 to 9999.99	A	-	RO

Current Magnitude is the instantaneous drive output current scaled so that it represents the r.m.s. phase current in Amps under steady state conditions.

Pr	Function	Range	Units	Default	Type
4.007 (Pr 0.075)	Symmetrical current Limit	0.0 to 1000.0	%	(App Init=110.0)	RW

An advanced user setting. Defines the symmetrical current limit.

Pr	Function	Range	Units	Default	Type
4.015	Motor Thermal time constant	1 to 3000	s	179	RW

User Motor Setting. Set to the thermal time constant for the motor.

The “Motor Thermal Time Constant” is a settings used to calculate the thermal over load of a motor. This is mainly used when a thermocouple is not installed on the motor. Thermal protection is then done by modeling the thermal characteristic of the motor and the motor load. When the model indicates a thermal overload a drive trip(t20 Motor too Hot) is set.

The t20 “Motor too Hot” trip indicates a motor thermal overload based on the “Motor Rated Current (pr 5.007) and the “Motor Thermal Time Constant”(Pr 4.015). The ”Motor Protection Accumulator “(Pr 4.019) displays the motor temperature as a percentage of the Maximum value. The drive will trip on “Motor Too Hot” when the ”Motor Protection Accumulator “ gets to 100%.

The “Motor Overload Alarm” (Pr 10.017) is set when the ”Motor Protection Accumulator “(Pr 4.019) reaches 75%.

The ”Motor Protection Accumulator “(Pr 4.019) exponentially increases when the drive current exceeds “Motor Rated Current” (Pr 5.007). It decreases when under. The thermal time constant defines the rate.

The thermal time constant is usually provided by the motor manufacturer. In some cases this is described a “Run at 150% rated current for 120s from cold. In this case use the equations in the M400 parameter guide to determine the thermal time constant.

For details see the M400 parameter descriptions.

Pr	Function	Range	Units	Default	Type
4.020	Percentage Load	-1000.0 to 1000.0	%	-	RO

Used internally for Dry Well Detection. Shows the level of torque producing current as a percentage of rated torque producing current for the motor.

Pr	Function	Range	Units	Default	Type
4.025	Low Speed thermal protection mode	0 to 1	-	(App Init=1)	RW

Set to enable low frequency thermal protection mode.

11.2.3.5 Motor Settings, Menu 5

Pr	Function	Range	Units	Default	Type
5.001 (Pr 0.057)	Motor Frequency	-550.0 to 550.0	Hz	-	RO

The motor output frequency.

Pr	Function	Range	Units	Default	Type
5.002	Output Voltage	Drive dependent	Hz	-	RO

The output voltage is the r.m.s line to line voltage at the a.C. TERMINALS OF THE DRIVE.

Pr	Function	Range	Units	Default	Type
5.003	Output Power	Drive dependent	Hz	-	RO

The Output Power is the power flowing via the a.c. terminals of the drive. The power is derived as the dot product of the output voltage and current vectors, and so this is correct even if the motor parameters are incorrect and the motor model does not align the reference frame with the flux axis of a motor. A positive value of power indicates power flowing from the drive to the motor.

Pr	Function	Range	Units	Default	Type
5.006 (Pr 0.005)	Motor Rated Frequency	0 to 550.00	Hz	0.00	RW

Motor Set up. The motor nameplate rated Frequency.

Pr	Function	Range	Units	Default	Type
5.007 (Pr 0.006)	Motor Rated Current	0 to Drive Rating	Amps	0.00	RW

Motor Set up. The motor nameplate rated Current. Defines the full load Amps of the motor rating. Enter the motor nameplate value in Amps. This value may be limited by the Drive rated current.

Pr	Function	Range	Units	Default	Type
5.008 (Pr 0.007)	Motor Rated RPM	0-9999	RPM	1800	RW

Motor Set up. The motor nameplate rated Speed in RPM. Set to zero the disable slip compensation. The recommended setting is zero or the low load Max speed at rated frequency.

e.g.Use 3600 rpm for a 60Hz two pole motor.
e.g.Use 1800 rpm for a 60Hz four pole motor.
e.g.Use 1200 rpm for a 60Hz six pole motor.

Pr	Function	Range	Units	Default	Type
5.009 (Pr 0.008)	Motor Rated Voltage	0 - 240 V, 0 - 480 V,0 - 575 V, 0 - 690 V	Volts	Depends on the drive model	RW

Motor Set up. The motor nameplate rated Voltage. Enter the rated motor voltage at base speed. This value may be limited by the Drive rated voltage.

Pr	Function	Range	Units	Default	Type
5.010 (Pr 0.009)	Motor Rated Power Factor	0 -1.00		0.85	RW

Motor Set up. The motor nameplate rated Power factor. If unknown leave at default value or perform an auto- tune.

Pr	Function	Range	Units	Default	Type
5.011	Number of Motor poles	0 -16	-	(App Init=0)	RW

Motor Set up. The motor nameplate number of poles. 0 – automatic pole calaculation.

Pr	Function	Range	Units	Default	Type
5.013	Dynamic V to F select	0 -2	-	(App Init=1)	RW

Advanced Set up. Set to 1 to enable Dynamic V to F mode. Further details are provided in the M400 User Guide.

Pr	Function	Range	Units	Default	Type
5.014 (Pr 0.076)	Voltage Mode Select	0-5	-	(App Init=2 FD)	RW

Defines the drive output mode, which can either be a voltage mode or a current mode

0 - Stator resistance and voltage offset measured at each start.
1 - No measurements
2 - Fixed boost mode
3 - Stator resistance and voltage offset measured at first drive enable
4 - Stator resistance and voltage offset measured at each power-up
5 - Square law characteristic

Normally FD (fixed V/Hz with low speed boost) is used. Further details are provided in the M400 User Guide.

Pr	Function	Range	Units	Default	Type
5.015	Low Frequency Voltage Boost	0 -50.0	%	(App Init=1.0)	RW

Advanced Set up. Defines the level of voltage boost at 0Hz when using a fixed V to F relationship. Further details are provided in the M400 User Guide.

Pr	Function	Range	Units	Default	Type
5.027	Enable Slip Compensation	-15.0 to 150.0	%	(App Init=100.0)	RW

Advanced Set up. Defines the proportional gain of the d.c. link voltage controller. Further details are provided in the M400 User Guide.

11.2.3.6 Sequencer, Menu 6

Pr	Function	Range	Units	Default	Type
6.012	Enable Stop Key	0 to 1	-	(App Init = 0)	RW

Controlled internally.

Pr	Function	Range	Units	Default	Type
6.015	Drive Enable	0 to 1	-	0	RW

Used internally.

Pr	Function	Range	Units	Default	Type
6.020	Date Format	0 to 1	-	(App Init=1)	RW

0 – European standard dd.mm.yy
1 – US Standard mm.dd.yy

Pr	Function	Range	Units	Default	Type
6.024	Reset energy meter	0 to 1	-	0	RW

Used to reset the energy readings held in the Drive.

Pr	Function	Range	Units	Default	Type
6.025	Energy meter MWh	-999.9 to 999.9	MWh	0	RO

Used to report the energy readings held in the Drive.

Pr	Function	Range	Units	Default	Type
6.026	Energy meter kWh	-99.99 to 99.99	kWh	0	RO

Used to report the energy readings held in the Drive.

Pr	Function	Range	Units	Default	Type
6.027	Electricity cost per kWh	0.0 to 600.0		0.0	RW

Used to report the energy readings held in the Drive.

Pr	Function	Range	Units	Default	Type
6.028	Running cost	-32000 to 32000		0	RO

Used to report the energy readings held in the Drive.

Pr	Function	Range	Units	Default	Type
6.029	Hardware Enable	0 to 1	-	0	RO

Used internally. Shows the Hardware enable state.

Pr	Function	Range	Units	Default	Type
6.030	Run Forward	0 to 1	-	0	RW(RO for App)

Used internally.

11.2.3.7 Analog I/O, Menu 7

Pr	Function	Range	Units	Default	Type
7.001	Analog 1 Input (Pressure Transducer input)	-100.00 to 100.00	%	-	RO

The analog input 1 value.

Pr	Function	Range	Units	Default	Type
7.002	Analog 2 Input (Pressure Transducer input)	-100.00 to 100.00	%	-	RO

The analog input 2 value.

Pr	Function	Range	Units	Default	Type
7.007 (Pr 0.012)	Analog 1 Input Mode (Pressure Transducer input)	-6 to 6	-	(App Init=4)	RW

Defines the type of analog signal that is connected to terminal 2. Recommend either 4 or 5, but must have a transducer to support that.

Mode	*Short Description*	*Long Description*
0	*0-20*	*0 mA to 20 mA*
1	*20-0*	*20 mA to 0 mA*
2	*4-20*	*4 mA to 20 mA with trip on loss*
3	*20-4*	*20 mA to 4 mA with trip on loss*
4	*4-.20*	*4 mA to 20 mA with no trip on loss*
5	*20-.4*	*20 mA to 4 mA with no trip on loss*
6	*VoLt*	*0 to +10 volts*

Pr	Function	Range	Units	Default	Type
7.010	Analog Input 1 Destination	0.000 to 30.999	-	(App Init = 0)	RW

Maps the destination parameter that the pressure transducer signal will be sent to. For the Pump Solution system the signal is read directly by the program. Always set this parameter to 0.

Pr	Function	Range	Units	Default	Type
7.011	Analog Input 2 Mode	-6 to 7	-	(App Init = 7)	RW

Defines the type of input for terminal 4 on the M400drive. Always set to dig (digital) then analog 2 serves as an extra digital input. This defaults to the Pump Fault input.

Mode	*Short Description*	*Long Description*
0	*0-20*	*0 mA to 20 mA*
1	*20-0*	*20 mA to 0 mA*
2	*4-20*	*4 mA to 20 mA with trip on loss*
3	*20-4*	*20 mA to 4 mA with trip on loss*
4	*4-.20*	*4 mA to 20 mA with no trip on loss*
5	*20-.4*	*20 mA to 4 mA with no trip on loss*
6	*VoLt*	*0 to +10 volts*
7	*Digital*	

Pr	Function	Range	Units	Default	Type
7.014	Analog Input 2 Destination	0.000 to 30.999	-	(App Init = 30.038)	RW

Maps the destination parameter that the signal will be sent to. For the Pump Solution system the signal is read directly by the program. For Simplex Pump default this is mapped to the pump fault input. The default for Analog Input 2 mode(Pr 7.011)is digital.

Pr	Function	Range	Units	Default	Type
7.026	Analog Input 1 Preset on Current loss.	4.00 or 20.00	-	4.00	RW

This parameter is not used in the Simplex Pump. On transducer failure the Simplex pump switches to a preset speed.

Pr	Function	Range	Units	Default	Type
7.028	Analog Input 1 Current Loop loss.	0 or 1	-	-	R0

Used internally. Indicates 4-20ma or 20-4 ma has failed.

NOTE: Analog Outputs can be configured in digital mode to provide 2 additional digital outputs.

Pr	Function	Range	Units	Default	Type
7.019	Analog Output 1 Source	0.000 to 30.999	-	2.001	RW

Analog Output 1 Source.

Pr	Function	Range	Units	Default	Type
7.020	Analog Output 1 Scaling	0.000 to 40.000	-	1.000	RW

Analog Output 1 Scaling.

Pr	Function	Range	Units	Default	Type
7.021	Analog Output 1 Mode	0 Voltage 1 0 to 20 mA 2 4 to 20 mA 3 Digital	-	0	RW

Analog Output 1 Mode.

Pr	Function	Range	Units	Default	Type
7.022	Analog Output 2 Source	0.000 to 30.999	-	2.001	RW

Analog Output 2 Source.

Pr	Function	Range	Units	Default	Type
7.023	Analog Output 2 Scaling	0.000 to 40.000	-	1.000	RW

Analog Output 2 Scaling.

Pr	Function	Range	Units	Default	Type
7.024	Analog Output 2 Mode	0 Voltage 1 0 to 20 mA 2 4 to 20 mA 3 Digital	-	0	RW

Analog Output 2 Mode.

11.2.3.8 Digital I/O, Menu 8

Pr	Function	Range	Units	Default	Type
8.001	Terminal T10 Status	0 or 1	-	-	RO

Digital I/O 1 Value

Pr	Function	Range	Units	Default	Type
8.002	Terminal T11 Status	0 or 1	-	-	RO

Digital I/O 2 Value

Pr	Function	Range	Units	Default	Type
8.003	Terminal T12 Status	0 or 1	-	-	RO

Digital Input 3 value. Default is the Auto Mode select.

Pr	Function	Range	Units	Default	Type
8.004	Terminal T13 Status	0 or 1	-	-	RO

Digital Input 4 value. Default is the Hand Mode select.

Pr	Function	Range	Units	Default	Type
8.005	Terminal T14 Status	0 or 1	-	-	RO

Digital Input 5 value. Default is the optional Flow Switch.

Pr	Function	Range	Units	Default	Type
8.006	Terminal T15 Status	0 or 1	-	-	RO

Digital Input 6 value. Default is the optional Flow gauge input.

Pr	Function	Range	Units	Default	Type
8.007	Terminal T16 Status	0 or 1	-	-	RO

Digital Input 7 value.

Pr	Function	Range	Units	Default	Type
8.008	Terminal T41/42 Relay Status	0 or 1	-	-	RO

Relay Output value.

Pr	Function	Range	Units	Default	Type
8.011	Terminal T10 Invert	0 normal 1-Invert	-	0	RW

Inverts the digital I/O 1 on terminal T10

Pr	Function	Range	Units	Default	Type
8.012	Terminal T11 Invert	0 normal 1-Invert	-	0	RW

Inverts the digital I/O 2 on terminal T11

Pr	Function	Range	Units	Default	Type
8.013	Terminal T12 Invert	0 normal 1-Invert	-	0	RW

Inverts the digital Input 3 on terminal T12

Pr	Function	Range	Units	Default	Type
8.014	Terminal T13 Invert	0 normal 1-Invert	-	0	RW

Inverts the digital input 4 on terminal T13

Pr	Function	Range	Units	Default	Type
8.015	Terminal T14 Invert	0 normal 1-Invert	-	0	RW

Inverts the digital Input 5 on terminal T14

Pr	Function	Range	Units	Default	Type
8.016	Terminal T15 Invert	0 normal 1-Invert	-	0	RW

Inverts the digital input 6 on terminal T15. If a Flow gauge is used it only connects to input 6.

Pr	Function	Range	Units	Default	Type
8.017	Terminal 16 Invert	0 normal 1-Invert	-	0	RW

Inverts the digital i input 7 on terminal T16

Pr	Function	Range	Units	Default	Type
8.018	Terminal T41/42 Invert	0 normal 1-Invert	-	0	RW

Inverts the relay output 7 on terminal T41/T42

Pr	Function	Range	Units	Default	Type
8.021	Terminal T10 Destination	0.000 to 30.999	-	(App Init = 0)	RW

Maps the digital I/O 1 on terminal T10 to the Pump Solutions program. Recommend setting this as an output.

Pr	Function	Range	Units	Default	Type
8.022	Terminal T11 Destination	0.000 to 30.999	-	(App Init = 0)	RW

Maps the digital I/O 2 on terminal T11 to the Pump Solutions program. Recommend setting this as an output.

Pr	Function	Range	Units	Default	Type
8.023	Terminal T12 Destination	0.000 to 30.999	-	(App Init = 30.031)	RW

Maps the digital input 3 on terminal T12 to the Pump Solutions program. Recommend setting this as an input to “Auto Mode Select Input ” (Pr 30.031).

Pr	Function	Range	Units	Default	Type
8.024	Terminal T13 Destination	0.000 to 30.999	-	(App Init = 30.032)	RW

Maps the digital input 4 on terminal T13 to the Pump Solutions program. Recommend setting this as an input to “Hand Mode Select Input ” (Pr 30.032).

Pr	Function	Range	Units	Default	Type
8.025	Terminal T14 Destination	0.000 to 30.999	-	(App Init = 30.034)	RW

Maps the digital input 5 on terminal T14 to the Pump Solutions program. Recommend setting this as an input to “Flow Switch Input ” (Pr 30.034).

NOTE: If using transducer mode, the Flow Switch Input can be added as a redundant mechanism to issue a motor stop.

Pr	Function	Range	Units	Default	Type
8.026	Terminal T15 Destination	0.000 to 30.999	-	(App Init = 0)	RW

Maps the digital input 6 on terminal T15 to the Pump Solutions program. Recommend using this for the Gallons per minute Flow meter, then the destination is not used (set to 0.000).

Pr	Function	Range	Units	Default	Type
8.027	Terminal T16 Destination	0.000 to 30.999	-	(App Init = 0)	RW

Maps the digital input 7 on terminal T16 to the Pump Solutions program. Recommend setting this as an input to “spare” (0.000)

Pr	Function	Range	Units	Default	Type
8.028	Terminal T41/42 Relay Source	0.000 to 30.999	-	(App Init = 10.001)	RW

Maps the Relay Output 1 on terminal T41/42 to the Pump Solutions program. Recommend setting this as an input to “Drive Healthy” (10.001)

Pr	Function	Range	Units	Default	Type
8.031	Terminal T10 Output select	0- Input 1- Output	-	(App Init = 1)	RW

Defines the Digital I/0 I as an Input or Output. Recommend setting this as an Output(=1)

Pr	Function	Range	Units	Default	Type
8.032	Terminal T11 Output select	0- Input 1- Output	-	(App Init = 1)	RW

Defines the Digital I/0 2 as an Input or Output. Recommend setting this as an Output(=1)

Pr	Function	Range	Units	Default	Type
8.035	Terminal T14 Output select	0- Input 1- Thermistor 2 -Thermistor 3 - Thermistor	-	(App Init = 0)	RW

Defines the Digital Input 5 as an Input or Thermistor. Recommend setting this as an Input(=0) for the flow switch.

Pr	Function	Range	Units	Default	Type
8.036	Terminal T15 Output select	0- Input 1- Freq 2 –Encoder AB	-	(App Init = 1)	RW

Defines the Digital Input 6 as an Input or Frequency counter. If a Flow gauge is used select Freq(=1). Otherwise use this as a digital input (=0) .

Pr	Function	Range	Units	Default	Type
8.039	STO Input 1 State	0 - Off 1- On	-	-	RO

STO input is not used by the Simplex Motion program. In theM400 the STO must be activated for the Motor to run.

11.2.3.9 System Status, Reset and Restart, Menu 10

Pr	Function	Range	Units	Default	Type
10.001	System Status	0 - 1	-	-	RO

Indicates a system fault when = 1.

Pr	Function	Range	Units	Default	Type
10.002	Drive Active	0 - 1	-	-	RO

Indicates the drive inverter is active when = 1.

Pr	Function	Range	Units	Default	Type
10.020 (Pr 0.069)	Last Trip	0 to 255	-		RO

Indicates the trip code for the most recent drive fault.

Pr	Function	Range	Units	Default	Type
10.021 (Pr 0.070)	Trip log #1	0 to 255	-	-	RO
10.022 (Pr 0.071)	Trip log #2	0 to 255	-	-	RO
10.023 (Pr 0.072)	Trip log #3	0 to 255	-	-	RO
10.024 (Pr 0.073)	Trip log #4	0 to 255	-	-	RO
10.025	Trip log #5	0 to 255	-	-	RO
10.026	Trip log #6	0 to 255	-	-	RO
10.027	Trip log #7	0 to 255	-	-	RO
10.028	Trip log #8	0 to 255	-	-	RO
10.029	Trip log #9	0 to 255	-	-	RO

Nine registers of the Trip log.

Pr	Function	Range	Units	Default	Type
10.033	Drive Reset	OFF(0) or ON(1)	-	OFF(0)	RW

Reset the Drive.

NOTE: Drive Reset does not restart the Simplex pump program. The Simplex pump has it's own initialization that will occur on power cycle or cycling "Onboard User Program Enable" (11.047).

Pr	Function	Range	Units	Default	Type
10.034 (Pr 0.077)	Number of Auto Reset Attempts	0 - 6	-	(App Init = 5)	RW

Defines the number of times the drive will attempt to automatically reset a fault.

Pr	Function	Range	Units	Default	Type
10.035 (Pr 0.078)	Auto reset Delay	0 - 600.0	sec	(App Init = 10.0)	RW

Defines the amount of time in between automatic fault reset attempts.

Pr	Function	Range	Units	Default	Type
10.038	User Trip	0 - 255	-		RW

Used internally to set Simplex Pump trips.

Pr	Function	Range	Units	Default	Type
10.040	Status Word	0 - 32767	-	-	RO

Used internally to get the status bits of Menu 10.

11.2.3.10 Drive Configuration and Status, Menu 11

Pr	Function	Range	Units	Default	Type
11.019	Status Mode Parameter	0 .000 to 30.999	-	App Init =30.009	RW

Used internally to set the Keypad display's second word to "Pressure Feedback" (Pr 30.009).

Pr	Function	Range	Units	Default	Type
11.030	User Security Code	0 to 9999	-	0	RW

Defines the user security code of the drive.

Pr	Function	Range	Units	Default	Type
11.031	User Drive Mode	1 Open Loop 2 RFC-A	-		RW

Always set to Open loop.

Pr	Function	Range	Units	Default	Type
11.032	Maximum Heavy Duty Rating	0.00 to 9999.99	A	-	RO

The Drive maximum current. Defines the maximum setting for the Motor Rated Current (Pr 5.007).

Pr	Function	Range	Units	Default	Type
11.033	Drive Rated Voltage	0 110V 1 200 V 2 400 V 3 575 V 4 690V	-	-	RO

Shows the Input voltage rating of the Drive

Pr	Function	Range	Units	Default	Type
11.034	Drive Configuration	0 to 9	-	0	RW

Sets the drive configuration mode i.e. the reference source location for the drive and I/O configuration. Always set this to 0 (AV)

0 AV
1 AI
2 AV Preset
3 A1 Preset
4 Preset
5 Keypad
6 Keypad Ref
7 Electronic Pot
8 Torque Control
9 PID Control

CAUTION

If this parameter is changed many other parameters will automatically change as a result. Therefore, set this to Pr and perform a drive reset prior to setting any other parameters.

Pr	Function	Range	Units	Default	Type
11.044 (Pr 0.010)	Security Status	0 to 5	-	1	RW

This setting defines the level of security for menu 0 through the keypad.

Value	Level	Access permitted
0	Menu 0	All writable parameters are available to be edited but only parameters in Menu 0 are visible.
1	All Menus	All writable parameters are visible and available to be edited.
2	Read Only Menu 0	All parameters are read-only. Access is limited to Menu 0 parameters only.
3	Read - Only	All parameters are read-only however all menus and parameters are visible.
4	Status Only	The keypad remains in status mode and no parameters can be viewed or edited.
5	No Access	The keypad remains in status mode and no parameters can be viewed or edited. Drive parameters cannot be accessed via a comms/fieldbus interface in the drive or any option module.

Pr	Function	Range	Units	Default	Type
11.047 (Pr 0.054)	OnBoard User Program Enable	0 stop 1 Run	-	1 Run	RW

Must be set to 1 to execute. Cycle to reset the program.

NOTE: Drive Reset does not restart the Simplex pump program. The Simplex pump has it's own initialization that will occur on power cycle or cycling "Onboard User Program Enable" (11.047).

Pr	Function	Range	Units	Default	Type
11.048	OnBoard User Program Status	-2147483648 - 2147483647	-		RO

Shows the status of the onboard user program. This is a value written to this parameter from the user program itself. (not used)

11.2.3.11 Threshold Detector and Variable Selectors, Menu 12

Pr	Function	Range	Units	Default	Type
12.008	Variable Selector 1 Source 1	0 .000 to 30.999	-	App Init = 7.001	RW (RO app)

Internal Mapping. Maps the Analog Input 1 to the Variable Selector 1. The Simplex Pump application initializes this is mapping.

Pr	Function	Range	Units	Default	Type
12.010	Variable Selector 1 Mode	0 to 9	-	App Init = 6	RW (RO app)

The Simplex Pump application routes the Analog 1 input through the variable selector to allow a time constant filter to be added. This parameter selects that mode. The Simplex Pump application initializes this Setting.

0 – Input 1
6 – Time constant filter

Pr	Function	Range	Units	Default	Type
12.011	Variable Selector Destination	0 .000 to 30.999	-	App Init = 0	RW

The variable selector is used to add a time filter. However the PID (Pr 14.004 = 12.012) sources the Variable selector.

Pr	Function	Range	Units	Default	Type
12.015 (Pr 0.017)	Pressure Transducer Filter	0.00 to 100.00	sec	App Init = 1.00	RW (RO app)

The Simplex Pump application routes the Analog 1 input through the variable selector to allow a time constant filter to be added. This parameter provides that time constant. The Simplex Pump application initializes this Setting.

11.2.3.12 Pressure PID Control, Menu 14

Pr	Function	Range	Units	Default	Type
14.002	PID Main Reference Source	0 .000 to 30.999	-	0.000	RW

Internal Mapping. Maps the main reference to the PID loop. Always set to “Not Used”(0.000). The Simplex Pump application initializes this is mapping.

Pr	Function	Range	Units	Default	Type
14.003	PID Reference Source	0 .000 to 30.999	-	App Init = 018.011	RW

Internal Mapping. Maps the source reference signal to the PID loop. Always set to PressurePIDSetPintPU(Pr 18.011). The Simplex Pump application initializes this is mapping.

Pr	Function	Range	Units	Default	Type
14.004	PID Feedback Source	0 .000 to 30.999	-	App Init = 012.012	RW

Internal Mapping. Maps the pressure feedback signal after it is filtered through Variable selector 1 to the PID loop. Always set to “Variable Selector 1 Output”(12.012). The Simplex Pump application initializes this is mapping.

Pr	Function	Range	Units	Default	Type
14.005	PID Ref Invert	0-1	-	0	RW (RO app)

Internal Setting. The Simplex Pump application initializes this setting.

Pr	Function	Range	Units	Default	Type
14.006	PID Fbk Invert	0-1	-	0	RW (RO app)

Internal Setting. The Simplex Pump application initializes this setting.

Pr	Function	Range	Units	Default	Type
14.010 (Pr 0.038)	Proportional Gain	0 - 4.000	Gain	1.000	RW

The pressure PID loop Proportional gain setting.

Pr	Function	Range	Units	Default	Type
14.011 (Pr 0.039)	Integral Time	0 - 4.000	sec	0.500	RW

The pressure PID loop Integral time setting.

Pr	Function	Range	Units	Default	Type
14.012 (Pr 0.040)	Differential Rate	0 - 4.000	d/dt	0.000	RW

The pressure PID loop Differential rate setting.

Pr	Function	Range	Units	Default	Type
14.013	PID Upper Limit	0.00 to 100.00	%	100.00	RW (RO app)

The Upper limit for the pressure PID loop output. If Dry Well is detected, this parameter is reduced by "Low Suction Freq Decrement" (Pr 30.64). If no Dry well this value is set to 100%. .

Pr	Function	Range	Units	Default	Type
14.014	PID Lower Limit	0.00 to 100.00	%	App Init = 0	RW (RO app)

The low limit for the pressure PID loop output. The Simplex Pump application initializes this setting.

Pr	Function	Range	Units	Default	Type
14.016	PID Output Destination	0 .000 to 30.999	-	App Init = 1.036	RW (RO app)

Internal Mapping. Maps the output of the pressure PID loop to the drive speed reference signal. Always set to 1.036. The Simplex Pump application initializes this is mapping.

11.2.3.13 I/O Expansion, Menu 15

Menu 15 parameters interface to the option module in the slot. For the Simplex pump the two option modules are the SI-I/O to expand digital wiring or the SI-Ethernet. Most of the parameters accessible for option modules use the Slot.Menu.Parameter addressing. This section will show some of the parameters used for setting up the SI-I/O module.

NOTE: Only Slot Menu S.00.ppp is reflected in the M15.xxx. To access S.01.ppp and up, use the Keypad.

Pr	Function	Range	Units	Default	Type
S.01.011	I/O 1 T2 Mode	0 Input 1- Output	-	Input	RW

Defines the type of input for terminal 2 of the SI-I/O module.

Pr	Function	Range	Units	Default	Type
S.01.012	I/O 2 T2 Mode	0 Input 1- Output	-	Input	RW

Defines the type of input for terminal 2 of the SI-I/O module.

Pr	Function	Range	Units	Default	Type
S.01.013	I/O 3 T3 Mode	0 Input 1- Output	-	Input	RW

Defines the type of input for terminal 3 of the SI-I/O module.

Pr	Function	Range	Units	Default	Type
S.01.014	I/O 4 T4 Mode	0 Input 1- Output	-	Input	RW

Defines the type of input for terminal 4 of the SI-I/O module.

Pr	Function	Range	Units	Default	Type
S.01.015	Analog Input #1 T7 mode	0 Digital 1- Volts	-	Volt	RW

Defines the type of input for terminal 7 of the SI-I/O module.

Pr	Function	Range	Units	Default	Type
S.01.016	Analog Input #2 T8 mode	0 Digital 1- Volts	-	Volt	RW

Defines the type of input for terminal 8 of the SI-I/O module.

Pr	Function	Range	Units	Default	Type
S.01.017	Analog Input #3 T9 mode	0 Digital 1- Volts	-	Volt	RW

Defines the type of input for terminal 9 of the SI-I/O module.

Pr	Function	Range	Units	Default	Type
S.02.001	Terminal T2 Status	0 or 1	-	-	RO

Digital I/O 1 State

Pr	Function	Range	Units	Default	Type
S.02.002	Terminal T3 Status	0 or 1	-	-	RO

Digital I/O 2 State

Pr	Function	Range	Units	Default	Type
S.02.003	Terminal T4 Status	0 or 1	-	-	RO

Digital I/O 3 State

Pr	Function	Range	Units	Default	Type
S.02.004	Terminal T5 Status	0 or 1	-	-	RO

Digital I/O 4 State

Pr	Function	Range	Units	Default	Type
S.02.005	Terminal T7 Status	0 or 1	-	-	RO

Digital Input 5 State

Pr	Function	Range	Units	Default	Type
S.02.006	Terminal T8 Status	0 or 1	-	-	RO

Digital Input 6 State

Pr	Function	Range	Units	Default	Type
S.02.007	Terminal T7 Status	0 or 1	-	-	RO

Digital Input 7 State

Pr	Function	Range	Units	Default	Type
S.02.008	Terminal T11 Status	0 or 1	-	-	RO

Digital Input 8 State

Pr	Function	Range	Units	Default	Type
S.02.009	Terminal T21/T22 Status	0 or 1	-	-	RO

Relay Output 1 State

Pr	Function	Range	Units	Default	Type
S.02.010	Terminal T23/T24 Status	0 or 1	-	-	RO

Relay Output 2 State

Pr	Function	Range	Units	Default	Type
S.02.021	I/O 1 T2 Source/Destination	0 .000 to 30.999	-	0	RW

Maps digital input terminal 2 of the SI-I/O module. Recommend setting to “Multi-set p1” Input (Pr 30.036).

Pr	Function	Range	Units	Default	Type
S.02.022	I/O 2 T3 Source/Destination	0 .000 to 30.999	-	0	RW

Maps digital input terminal 3 of the SI-I/O module. Recommend setting to “Multi-set p2” Input (Pr 30.037).

Pr	Function	Range	Units	Default	Type
S.02.023	I/O 3 T4 Source/Destination	0 .000 to 30.999	-	0	RW

Maps digital input terminal 4 of the SI-I/O module. Recommend setting to "Drive Reset" Input (10.033).

Pr	Function	Range	Units	Default	Type
S.02.024	I/O 4 T5 Source/Destination	0 .000 to 30.999	-	0	RW

Maps digital input terminal 5 of the SI-I/O module.

Pr	Function	Range	Units	Default	Type
S.02.025	In 5 T7 Destination	0 .000 to 30.999	-	0	RW

Maps digital input terminal 7 of the SI-I/O module.

Pr	Function	Range	Units	Default	Type
S.02.026	In 6 T8 Destination	0 .000 to 30.999	-	0	RW

Maps digital input terminal 8 of the SI-I/O module.

Pr	Function	Range	Units	Default	Type
S.02.027	In 7 T9 Destination	0 .000 to 30.999	-	0	RW

Maps digital input terminal 9 of the SI-I/O module.

Pr	Function	Range	Units	Default	Type
S.02.028	In 8 T11 Destination	0 .000 to 30.999	-	0	RW

Maps digital input terminal 11 of the SI-I/O module.

Pr	Function	Range	Units	Default	Type
S.02.029	Terminal T21/T22 Relay 1Source	0 .000 to 30.999	-		RW

Maps the output relay #1 of the SI-I/O module to the signal of choice.

Pr	Function	Range	Units	Default	Type
S.02.030	Terminal T23/T22 Relay 21Source	0 .000 to 30.999	-		RW

Maps the output relay # 2 of the SI-I/O module to the signal of choice.

11.2.3.14 Pump Control, Menu 18

Pr	Function	Range	Units	Default	Type
18.011	Scaled Pressure Setpoint for PID	± 32767	P.U.		RW (app RO)

This is an internal variable, that provides Pressure Setpoint in units the PID takes. The PID Input does a scaling calculation based on the source range. 18.011 has a ± 32767 range so 18.011's value must be scaled to those units. The internal program writes to this variable so for application purposes in the read only.

Pr	Function	Range	Units	Default	Type
18.012	Pump States	± 32767			RW (app RO)

This is a bit map of the pump states. The internal program writes to this variable so for application purposes in the read only.

Bit	Name	Description
0	Start Initiate	Initiate Pressure below low start point
1	Start Timer	Start delay completed
2	Stop Initiate	Sleep speed, S/W No flow detected, No Flow switch timer, or Low GPM timer.
3	GPM No Flow timer	Flow rate has been below the minimum flow for the GPM delay.
4	No flow Switch timer	No flow switch has been active for it's delay.
5	Sleep Low speed Timer	Motor RPM has below the Speed for it's delay.
6	No Flow – In BW Test	No flow detection, Motor freq < No flow freq. So no flow is now in the bandwidth test
7	No Flow – Lower Set Point	No Flow detection, have been within the Bandwidth, lower the Pressure set point and see if pressure follows.
8	No Flow - Detected	No Flow detected, pressure did not change, cause must be no flow.
9	Dry Well	Dry well is detected.
10	Run Drive	Drive is commanded into the run mode. The pump is running.
13	Hand Mode	In Hand mode
14	Pipe Fill running	In the Pipe Fill mode.
15	Transducer Loss running	Transducer failed, The pump will be running in Transducer loss mode.

Pr	Function	Range	Units	Default	Type
18.013	Over Cycle Mode	0--2		(App Init = 0)	RW

Define the over cycle mode. Used with Pr 18.014, 30.068 and 30.069

Value	Name	Description
0	Disabled	Over Cycle protection is disabled.
1	Trip	Tr 86 Over cycle trip is activated,
2	Increment Set point	Increment the pressure setpoint,.

Pr	Function	Range	Units	Default	Type
18.014	Max Over Cycles in one hour	± 32767		(App Init = 5)	RW

This sets the maximum number of times per hour the drive will be allowed to start/cycle within a one hour period before the following actions are taken:-

Protection Mode 0 (18.13 = 1)

When Max Cycles/Hour is exceeded Trip pump drive on 'Tr86'

Protection Mode 1 (18.13 = 2)

When Max Cycles/Hour is exceeded increment the pressure set point each time it is restarted with parameter 30.68 to a maximum of parameter 30.69.

Pr	Function	Range	Units	Default	Type
18.031	Valve #1 timer	0 - 1	-	0	RW (App RO)

CTVue only. CTVue has a day and timer function that can be used to set two different output functions. This is one of those output functions. The output function can be mapped to a digital output to activate a valve. The CTVue program writes to this variable so for application purposes in the read only.

Pr	Function	Range	Units	Default	Type
18.032	Valve #2 timer	0 - 1	-	0	RW (App RO)

CTVue only. CTVue has a day and timer function that can be used to set two different output functions. This is one of those output functions. The output function can be mapped to a digital output to activate a valve. The CTVue program writes to this variable so for application purposes in the read only.

Pr	Function	Range	Units	Default	Type
18.033	GPM out of Bandwidth	0 - 1	-	0	RW (App RO)

CTVue only. CTVue can be set to monitor flow rates. If the flow is not within the one of the Min/Max flow bandwidths, this Output function is set.

11.2.3.15 Application Menu 2 - Menu 20

Menu 20 is not used.

11.2.3.16 Menu 0 Setup Menu 22

Pr	Function	Range	Units	Default	Type
22.001 to 22.080	Map Menu to Menu 0	0 .000 to 30.999	-		RW

These parameters are used to define the Menu 0 mapping. Advanced parameters are mapped to Menu 0. Security access can be set up to only allow access to menu 0. See Section 11.2.1 for the map settings.

11.2.3.17 Custom Menu 30

Pr	Function	Range	Units	Default	Type
Pr 30.003 (Pr 0.056)	SoftwareVersion	0 – 65535		App Init = version	RO

Displays the Simplex Pump Software Version. This constant is loaded in the Simplex Pump Initialization program.

Pr	Function	Range	Units	Default	Type
Pr 30.004 (Pr 0.024)	GPM Low Stop	0.0 – 3276.7	PSI	1.0	RW

Stop the pump if GPM rate is below this level.

Pr	Function	Range	Units	Default	Type
Pr 30.005 (Pr 0.025)	GPM Low Stop Delay	0.0 – 6553.5	Sec	0.0	RW

Insure the pump low GPM is valid for this delay before Stopping the pump. A zero(0) entry disables this function.

Pr	Function	Range	Units	Default	Type
Pr 30.006 (Pr 0.063)	GPM	0.0 – 6553.5	GPM	-	RO

The current GPM rate. This is scaled from counts every 5 seconds. PR 30.067 is the scaling factor.

Pr	Function	Range	Units	Default	Type
Pr 30.007 (Pr 0.064)	Gallons	-2147483648 to 2147483647	gals	-	RO

The current Total number of gallons. This is scaled from total counts M30.065. PR 30.066 is the scaling factor. Reset by (Pr 30.035).

NOTE: Total count should be reset every month. .

Pr	Function	Range	Units	Default	Type
Pr 30.009 (Pr 0.059)	Pressure Feedback Value	0 to 6553.5	PSI	-	RO

Indicates the scaled pressure feedback PSI

Pr	Function	Range	Units	Default	Type
Pr 30.010 (Pr 0.062)	PID Error	± 3276.7	PSI	-	RO

Indicates the pressure PID loop error

Pr	Function	Range	Units	Default	Type
Pr 30.011 (Pr 0.060)	Selected Pressure Setpoint Value	0 to 6553.5	PSI	-	RO

Indicates the selected user pressure setpoint value. This is the selected set point based on the PressureSetpointSelect1Input (Pr 30.036) and PressureSetpointSelect2Input (Pr 30.037) which selects 1 of 4 Pressure set points.

00 PressureMainSetpoint0 (Pr 30.030)
01 PressureSetpoint1 (Pr 30.024)
10 PressureSetpoint2 (Pr 30.025)
11 PressureSetpoint2 (Pr 30.026)

NOTE: The set point used by the PID is the ”Pressure Final Setpoint” (Pr 30.008). It reflects this set point dynamically altered by No Flow Detection.

Pr	Function	Range	Units	Default	Type
Pr 30.012 (Pr 0.061)	Final Pressure Setpoint with Inc & Dec	0 to 6553.5	PSI	-	RO

Indicates the pressure setpoint after being incremented or decremented for detection purposes. This is the value inputted into the PID controller.

Pr	Function	Range	Units	Default	Type
Pr 30.013 (Pr 0.018)	Low Pressure Setpoint "Wake"	0 – 6553.5	PSI	30.0	RW

This is also known as the Wake Pressure. This sets the Low pressure setpoint start level. This is pressure at which the drive will begin to run.

Pr	Function	Range	Units	Default	Type
Pr 30.014 (Pr 0.031)	Under Pressure Level	0 – 6553.5	PSI	0.0	RW

This sets the "Under Pressure Level" when "UnderPressureMode" (Pr 30.050) is set to 1. Under pressure is detected either based on a this level or by being under the "pressure setpoint bandwidth"(Pr 30.015). The "Under Pressure Delay" (Pr 30.058) equal to zero disables this function. Under pressure will set a Trip (tr83).

Under pressure is enabled when all conditions are met:

Running in Auto Mode
"Under Pressure Delay" (Pr 30.058) not zero
Pipe fill is complete.
The motor is a maximum speed (Within bandwidth)
There transducer is working

Pr	Function	Range	Units	Default	Type
Pr 30.015 (Pr 0.034)	Pressure Setpoint Bandwidth	0 to 25.5	PSI	5.0	RW

Sets the At Setpoint Bandwidth. When the pressure is within "PressureFinalSetpoint" (Pr 30.008) +/- this bandwidth, the "WithinFrequencyBandwidthOutput" (Pr 30.042) signal is active.

"Within Frequency Bandwidth" is as a output signal, and is used internally by No Flow detection.

Used in No Flow Detection. After decrementing the pressure setpoint the feedback is monitored to determine if it is within this bandwidth of the setpoint. If it is the original setpoint is restored. If not a No Flow condition is detected.

Pr	Function	Range	Units	Default	Type
Pr 30.017 (Pr 0.015)	Transducer Loss Action	O to 2		1	RW

Sets the action taken in the event of a transducer signal loss.

0 = Disabled
1 Trip the Drive (Tr 81)
2 = Run at a fixed speed set by Pr 1.27

Pr	Function	Range	Units	Default	Type
Pr 30.018 (Pr 0.047)	Dry Well Detection Mode	0 to 2		2	

Sets the action taken in the event of a Dry Well Detection.

0 = Alarm only
1 = Fault (Trip Tr 84)
2 = Limit Maximum Speed

For Drywell Mode 1, the PID Output and thus the maximum motor frequency is limited reducing the "PID1 Output Upper Limit"(14.013)(defaulted to 100%) by "LowSuctionFreqDecrement" (Pr 30.064) . See parameter Pr 30.062.

Pr	Function	Range	Units	Default	Type
Pr 30.020 (Pr 0.026)	Over Pressure Alarm Level	0 – 6553.5	PSI	0.0	RW

If the pressure feedback (Pr 30.009) rises above this setting the Over Pressure Alarm digital output (Pr 30.041) will turn on. Used in Auto mode only. A zero value disables.

Pr	Function	Range	Units	Default	Type
Pr 30.021 (Pr 0.027)	Over Pressure Trip Level	0 – 6553.5	PSI	0.0	RW

If the pressure feedback (Pr 30.0009) exceeds this setting the drive will fault and trip code 82 will be indicated. Used in Auto mode only. A zero value disables.

Pr	Function	Range	Units	Default	Type
Pr 30.022 (Pr 0.013)	Minimum Pressure Feedback Scaling	0 – 6553.5	PSI	0.0	RW

Sets the scaling in PSI for the minimum pressure reading of the feedback transducer.

Pr	Function	Range	Units	Default	Type
Pr 30.023 (Pr 0.014)	Maximum Pressure Feedback Scaling	0 – 6553.5	PSI	150.0	RW

Sets the scaling in PSI for the maximum pressure reading of the feedback transducer.

Pr	Function	Range	Units	Default	Type
Pr 30.024 (Pr 0.033)	Pressure Setpoint 1	0 – 6553.5	PSI	0.0	RW

This is one of 3 alternative pressure setpoints for the system.

Alternative "Pressure setpoints" are the selected set point based on the PressureSetpointSelect1Input (Pr 30.036) and PressureSetpointSelect2Input (Pr 30.037) which selects 1 of 4 Pressure set points.

00 PressureMainSetpoint0 (Pr 30.030)
01 PressureSetpoint1 (Pr 30.024)
10 PressureSetpoint2 (Pr 30.025)
11 PressureSetpoint2 (Pr 30.026)

The optional SI-I/O module digital inputs are usually used for the alternative setpoints selection.

Pr	Function	Range	Units	Default	Type
Pr 30.025	Pressure Setpoint 2	0 – 6553.5	PSI	0.0	RW

This is one of 3 alternative pressure setpoints for the system.

See Parameter 30.024 for description.

Pr	Function	Range	Units	Default	Type
Pr 30.026	Pressure Setpoint 3	0 – 6553.5	PSI	0.0	RW

This is one of 3 alternative pressure setpoints for the system.

See Parameter 30.024 for description.

Pr	Function	Range	Units	Default	Type
Pr 30.027 (Pr 0.044)	Pressure Setpoint Decrement	0.0 to 25.5	PSI	1.0	RW

Pressure Setpoint Decrement is used in the No Flow Detection. See parameter (Pr 30.053).

In No Flow detection, the pressure set point is reduced by this value. The PID will reduce motor speed correspondingly . If the pressure follows the speed reduction, it is assumed that there is flow. If the pressure is stays, there is no flow.

Pr	Function	Range	Units	Default	Type
Pr 30.029 (Pr 0.037)	PipeFill MaxPressure	0.0 – 6553.5	PSI	0.0	RW

Used in the Pipe Fill feature to stop the Pipe Fill once this pressure is met. 0 entry disables. The Pipe fill will stop on either the Pipe Fill Delay (30.061) completing or this pressure is met.

Pr	Function	Range	Units	Default	Type
Pr 30.030 (Pr 0.032)	Pressure Main Setpoint	0 – 6553.5	PSI	80.0	RW

The main pressure setpoint for the system to maintain, entered in PSI.

Pr	Function	Range	Units	Default	Type
Pr 30.031	AUTO Mode Select Digital Input	0 -1	-	0	RW

Input Function. This bit selects AUTO mode when =1. Terminal T12 is normally mapped to this bit through Pr 8.023 so that the digital input controls the turning on and off of AUTO mode.

Pr	Function	Range	Units	Default	Type
Pr 30.032	HAND Mode Select Digital Input	0 -1	-	0	RW

Input Function. This bit selects HAND mode when =1. Terminal T13 is normally mapped to this bit through Pr 8.024 so that the digital input controls the turning on and off of HAND mode.

Pr	Function	Range	Units	Default	Type
Pr 30.033	Pipe Fill Done Digital Output	0 -1	-	0	RO

Output Function. Indicates the Pipe Fill Time has elapsed and Pipe Fill is complete when = 1.

Pipe Fill runs the motor at a fixed speed (1.026) for the time duration(Pr 30.061) at every pump start.

Pr	Function	Range	Units	Default	Type
Pr 30.034	Flow Switch Digital Input	0 - 1	-	0	RW

Input Function. If a Flow switch is configured, Terminal T14 is normally mapped to this bit through Pr 8.025 so that the digital input indicates to the program when the flow switch is on.

If not used, defaults to off(0).

Pr	Function	Range	Units	Default	Type
Pr 30.035 (Pr 0.065)	Clear Gallons Digital Input	0 - 1	-	0	RW

Input Function. This is used to clear the “Total Gallons”(30.007). The “Position Count Total”(Pr 30.065) is cleared. It holds the total pulse count received on digital input 6 (Terminal 15). The gallons total is scaled from the “Position Count Total”. Setting 30.035 to 1 will clear the count. After clearing the count, 30.035 will be automatically reset to 0.

Pr	Function	Range	Units	Default	Type
Pr 30.036	Multi-set p1 Digital Input	0 - 1	-	0	RW

Input Function. This bit, “Multi-set p1”, along with “Multi-set p2”(Pr 30.037) selects one of the four pressure set points. To assign a terminal to this pin it is recommended using the SI-I/O Option Module.

Pr	Function	Range	Units	Default	Type
Pr 30.037	Multi-set p2 Digital Input	0 - 1	-	0	RW

Input Function. This bit, “Multi-set p2”, along with “Multi-set p2”(Pr 30.036) selects one of the four pressure set points. To assign a terminal to this pin it is recommended using the SI-I/O Option Module.

Pr	Function	Range	Units	Default	Type
Pr 30.038	Pump Fault Digital Input	0 - 1	-	0	RW

Input Function. This is used to map an external pump fault signal into the drive. When set, the drive will trip (tr 85). By Default this is mapped to the Analog Input 2 in digital mode.

Pr	Function	Range	Units	Default	Type
Pr 30.039	Over Temperature Digital Input	0 - 1	-	0	RW

Input Function. This is used to map an external Over Temperature fault signal into the drive. When set, the drive will trip (tr 87).

Pr	Function	Range	Units	Default	Type
Pr 30.040	System Ready Digital Output	0 - 1	-	-	RO

Output Function. Indicates the system is ready to run (no faults) when = 1. Can be used as the source parameter for any output. Only valid in Auto mode.

Pr	Function	Range	Units	Default	Type
Pr 30.041	Over Pressure Alarm Digital Output	0 - 1	-	-	RO

Output Function. Indicates an over pressure warning when = 1. Can be used as the source parameter for any output.

Over pressure occurs only in Auto mode when feedback pressure is greater than the “Pressure High Alarm” (Pr 30.020). If “Pressure High Alarm” (Pr 30.020) is zero the alarm is disabled. For the alarm to go off the pressure must be 95% less of the “Pressure High Alarm” (Pr 30.020).

Pr	Function	Range	Units	Default	Type
Pr 30.042	Within Max. Frequency Bandwidth Output	0 - 1	-	-	RO

Output Function. Indicates the motor Speed is at its maximum. That is it is running within the bandwidth setting of the maximum frequency when = 1. Can be used as the source parameter for any output.

Pr	Function	Range	Units	Default	Type
Pr 30.043	At Reference Digital Output	0 - 1	-	-	RO

Output Function. Indicates the system is running at the reference (setpoint) speed when = 1. That is it is at the”Pressure Final Setpoint” (Pr 30.008) and within its bandwidth “Pressure Setpoint Bandwidth“(Pr 30.15). Can be used as the source parameter for any output.

Pr	Function	Range	Units	Default	Type
Pr 30.044	Transducer Loss Digital Output	0 - 1	-	-	RO

Output Function. Indicates a feedback transducer signal loss when = 1. Can be used as the source parameter for any output.

Pr	Function	Range	Units	Default	Type
Pr 30.045	Drive Running in AUTO Digital Output	0 - 1	-	-	RO

Output Function. Indicates the system is running and in AUTO mode when = 1. Can be used as the source parameter for any output.

Pr	Function	Range	Units	Default	Type
Pr 30.046	Dry Well/Low Suction Digital Output	0 - 1	-	-	RO

Output Function. Indicates the system has detected a Dry Well condition when = 1. Can be used as the source parameter for any output.

Pr	Function	Range	Units	Default	Type
Pr 30.047 (Pr 0.067)	AUTO Mode Selected Digital Output	0 - 1	-	-	RO

Output Function. Indicates the system is in AUTO Mode when =1.

Pr	Function	Range	Units	Default	Type
Pr 30.048 (Pr 0.068)	HAND Mode Selected Digital Output	0 - 1	-	-	RO

Output Function. Indicates the system is in HAND Mode when =1.

Pr	Function	Range	Units	Default	Type
Pr 30.049	Under Pressure Fault Digital Output	0 - 1	-	-	RO

Output Function. Indicates the system has detected a Under Pressure condition when = 1.

Under pressure Conditions:

Under Pressure delay must be non Zero
Motor must be at max speed.
Pipe fill must be complete.
Pressure must be below either the Under press level or below Set point bandwidth. (Mode selected)
Transducer must be operational.

Pr	Function	Range	Units	Default	Type
Pr 30.050 (Pr 0.030)	Under Pressure Mode	0 – Pressure Setpoint 1 – Level (Pr 30.014)	-	0	RW

This parameter selects the mode for the under pressure detection.

Under pressure Modes:

0 Pressure Setpoint, Use Below Pressure setpoint Bandwidth

1 Level. Use “Under Pressure Setpoint “ (Pr 30.014)

Pr	Function	Range	Units	Default	Type
Pr 30.051 (Pr 0.021)	Minimum Sleep Speed/Freq	0 – 655.35	Hz	35.00	RW

While running in Auto Mode after Pipe Fill, if the motor frequency falls below this level for the period of time set in Pr 30.052 the system will initiate sleep. The pump will restart with the start conditions are met. Sleep is disabled if this value is zero.

The concept here is, as the flow demand reduces the pump speed slows down yet keeps our desired pressure. At slow speeds the pump becomes inefficient and it best to just shut it off and wait for the pressure to drop and restart the pump.

Pr	Function	Range	Units	Default	Type
Pr 30.052 (Pr 0.022)	Sleep Delay	0 – 6553.5	sec	5.0	RW

During Auto operation if the drive speed falls below Minimum Sleep Speed (Pr 30.051) for this specified amount of time, stop will be initiated. The pump will restart with the start conditions are met.

Pr	Function	Range	Units	Default	Type
Pr 30.053 (Pr 0.042)	No Flow Freq Bandwidth	0.00 - 655.35	Hz	6.0	RW

The Hz bandwidth setting is used in No Flow Detection. “Sleep”, “NoFlow” and the “No Flow Switch” all can independently initiate a pump stop. The pump will restart with the start conditions are met. No Flow is only active in Auto Mode, not during pipe fill and not while in dry well operation.

For No flow the system goes through 3 steps to detect NoFlow.

1) It monitors the motor frequency and if it is below the “No Flow Freq Setpoint” (Pr 30.054) No Flow condition 1 is met.
2) It monitors the motor frequency and if it is within “No Flow Freq Setpoint”(Pr 30.054) +/- “No Flow Freq bandwidth”(Pr 30.053) for the period of time set in “No Flow Constant Freq Delay” (Pr 30.056) the “No Flow” condition 2 is met.
3) At this point the pressure set point is reduced by Pr 30.027. After a “NoFlow Stabilizing Delay” (Pr 30.055), the “Pressure At Setpoint” (Pr 30.043) signal is checked to see if the pressure tracked the Pressure reduction. If pressure did not, a NoFlow is detected.

NOTE: In setting up the system, insure that there is no dead space between the NoFlow lower bandwidth and the sleep frequency. ((Pr 30.054-Pr 30.053) =< Pr 30.051)

Pr	Function	Range	Units	Default	Type
Pr 30.054 (Pr 0.041)	No Flow Freq Setpoint	0 – 655.35	Hz	20.00	RW

See Pr 30.053 for details. In No Flow Detection process step 2, the system monitors the motor frequency and if it is below the setting in (Pr 30.054) plus or minus the bandwidth (Pr 30.053) for the period of time(Pr 30.056) the system proceeds with the No Flow Detection process.

Pr	Function	Range	Units	Default	Type
Pr 30.055 (Pr 0.045)	No Flow Stabilizing Delay	0 – 6553.5	sec	15.0	RW

See Pr 30.053 Step 3. This delay is used in the software no flow detection to allow the system to stabilize after it has decremented the pressure set point.

After a “NoFlow Stabilizing Delay” (Pr 30.055), the “Pressure At Setpoint” (Pr 30.043) signal is checked to see if the pressure tracked the Pressure reduction. If pressure did not, a No Flow is detected. The assumption is a water flow will allow the pressure to drop to the new set point while the pressure will remain if there is no flow.

Once this check is completed pressure setpoint will return to the original setting.

Pr	Function	Range	Units	Default	Type
Pr 30.056 (Pr 0.043)	No Flow Constant Freq Delay	0 – 6553.5	sec	15.0	RW

See Pr 30.053. During No Flow Detection the system monitors the frequency of the motor. If it stays within “No Flow Freq Setpoint” (Pr 30.054) +/- “No Flow Freq bandwidth”(Pr 30.053) bandwidth set for the amount of time set in “No Flow Constant Freq Delay” (Pr 30.056) the system will decrement the setpoint for No Flow Detection.

Pr	Function	Range	Units	Default	Type
Pr 30.057 (Pr 0.028)	Max Frequency Bandwidth	0 – 655.35	Hz	1.00	RW

Sets the bandwidth of Pr 1.006 for determining when the drive is operating at maximum frequency. The system uses this during Under Pressure and Low Suction detection.

Pr	Function	Range	Units	Default	Type
Pr 30.058 (Pr 0.029)	Under Pressure Detect Time	0 – 6553.5	sec	0.0	RW

This is the time a under pressure condition must be valid in order to set an Under Pressure Trip (t83). A setting of zero seconds disables this fault detection. Under pressure has two detect modes selected by Under Pressure Mode(Pr 30.050). In both cases the motor must be running at max speed, which is when the motor frequency is within the Max Frequency Bandwidth (Pr 30.057).

Mode 0"Setpoint" If the drive operates at the maximum frequency (set by bandwidth Pr 30.057) for a period of time set in this parameter and the pressure remains below setpoint(Pr 30.014) an Under Pressure fault will occur.

Mode 1 "Level "–If the drive operates at the maximum frequency (set by bandwidth Pr 30.057) for a period of time set in this parameter and the pressure remains below the Final pressure setpoint(Pr 30.008) by the bandwidth (Pr 30.015) an Under Pressure fault will occur.

Pr	Function	Range	Units	Default	Type
Pr 30.059 (Pr 0.019)	Start Delay Time	0 – 6553.5	sec	5.0	RW

The system will delay activating the drive for a specified amount of time after a start condition is detected. A start condition is the pressure transducer falls below the Low Setpoint(Pr 30.013). If the transducer signal level rises above the Low Set-Point value the timer will reset and the drive will remain inactive. The drive must in Auto Mode, Enabled, Healthy(no trips) to start.

Pr	Function	Range	Units	Default	Type
Pr 30.060 (Pr 0.020)	No Flow Switch Delay	0 – 6553.5	sec	5.0	RW

The No Flow switch must be valid for this period of time. Then it will become a stop condition (Sleep, NoFlow or No Flow Switch). If set to zero, the No Flow switch is disabled. The pump will restart when the start conditions are met.

Allow enough time from the pump start for the flow to turn this switch off.

Pr	Function	Range	Units	Default	Type
Pr 30.061 (Pr 0.036)	Pipe Fill Time	0 – 6553.5	sec	0.0	RW

Upon starting in AUTO mode the motor will run at a set frequency (Pr 1.26) for the time specified by this parameter. After the time expires, normal PID operation will begin.

CAUTION

Care must be taken when setting this parameter because system over pressure can occur. Always set the Over Pressure Fault detection in Pr 30.021 when using this feature. A setting of zero eliminates the Pipe Fill run time.

Pr	Function	Range	Units	Default	Type
Pr 30.062 (Pr 0.048)	Dry Well Detection Delay	0 – 6553.5	sec	0.0	RW

"Dry Well Detection Delay"(Pr 30.062) specifies the time delay that the dry well condition must be valid before a declaring a Dry Well. A setting of 0 disables dry well detection.

Drywell detection monitors the system for a light load with the motor at maximum speed. This can indicate a number of problems, one being air in the lines, a dry well. When dry well is detected, either the drive is tripped or the maximum motor speed is clamped until a load is detected.

Dry Well monitors the Drive Torque (4.020) for being below the “Speed / Torque Low Load Point” (Pr 30.063) while within “Max Frequency Bandwidth”(Pr 30.057) for the duration of “Dry Well Detection Delay” (Pr 30.062). If true, a Dry Well is detected. Based on “DryWellModeSelection”(Pr 30.018) the drive either trips (tr84) or the PID output is limited(14.013) by “LowSuctionFreqDecrement”(Pr 30.064).

Dry well detection is monitored in Auto mode after Pipe fill has completed.

Pr	Function	Range	Units	Default	Type
Pr 30.063 (Pr 0.046)	Speed/Torque Low Load Point	0 – 100.0	%	0.0	RW

Used in Dry Well Detection. This is the motor torque value threshold at maximum speed. When the function is enabled the system compares the actual motor torque at maximum speed to this setting. If the actual torque is below this setting a Dry Well (unloaded pump) is detected.

Pr	Function	Range	Units	Default	Type
Pr 30.064 (Pr 0.049)	Low Suction Frequency Decrement	0 – 100.00	%	0.00	RW

The amount in % the setpoint will be reduced if a Dry Well/Low Suction condition is detected. “DryWellModeSelection”(Pr 30.018) must be set to 2. If set to 1, the drywell will cause a trip (Tr 84). If set to 0, the drywell is disabled.

Pr	Function	Range	Units	Default	Type
Pr 30.065	Position Count Total	0 – 2147483647	counts	0	RO

This is used to calculate the “Total Gallons”(Pr 20.028). This holds the total pulse count received on digital input 6 (Terminal 15). To get gallons this value is scaled by “Gallons Scale“(Pr 18.012,DP4). The count is cleared by setting “Clear Gallons”(Pr 18.035)

Pr	Function	Range	Units	Default	Type
Pr 30.066 (Pr 0.050)	Scale Gallons	0.0000 – 3.2767	-	0.0111	RW

Gallons Scale for FTS-15 flow gauge. {.0055, .0111, .0200, .464, .0761}

This is used to calculate the “Total Gallons”(30.007). This holds the gallons scale with 4 decimal positions. To get gallons the pulse count(30.065) value is scaled by “Gallons Scale“(Pr 30.066,DP4)

Pr	Function	Range	Units	Default	Type
Pr 30.067 (Pr 0.051)	Scale GPM	0.0000 – 3.2767	-	0.1306	RW

GPM Scale for FTS-15 flow gauge. {.0645, .1306, .2400, .5560, .9133}

This is used to calculate the “Gallons per Minute”(30.006). This holds the GPM scale with 4 decimal positions. The GPM count is captured in the User program. It is the number of flow gauge pulse over a 5 second period. The M400 internal frequency counter (3.045) was not used.

Pr	Function	Range	Units	Default	Type
Pr 30.068	Over cycle Increment	0.0 – 10.0	PSI	1.0	RW

This defines the amount of set point incremental increase for the Over Cycling Protection Mode when 18.13 = 2. The Set point is increased in an attempt to decrease the cycling rate.
See also parameters 30.69, 18.13 & 18.14.

During Over Cycling Protection if the system has ran for one hour without exceeding the maximum number of cycles (18.14) the set point will be restored to the original setting.

Pr	Function	Range	Units	Default	Type
Pr 30.069	Max Over cycle Increment	0.0 – 200.0	PSI	10.0	RW

This sets the maximum amount of set point increment accumulated allowed during over cycling protection when 18.13 = 2.
See also parameters 30.68, 18.13 & 18.14.

Pr	Function	Range	Units	Default	Type
Pr 30.070	External Pump Enable	0.-1	-	1	RW

Enables AUTO and HAND Selections and thus enables or disables the pump operation. Intended to be used by external control such as a CTVue function or a well float.

12 Trouble Shooting and Diagnostics

12.1 Selecting Auto and Hand modes from the Keypad

To activate auto or hand mode from the key pad, you must directly set the input functions. If the input functions are mapped to input pins this terminal connection will override any key pad entry. By default Terminals T12(Pr 8.023) and T13 (Pr 8.024) are mapped to the Auto select (Pr 30.031) and Hand select(Pr 30.032) input functions. To use the key pad, you must set M8.P023 and M8.P024 to zero or some other value. Then you can use the key pad to Auto select (Pr 30.031) and Hand select(Pr 30.032) input functions directly.

12.2 Pump Fault/Trip Codes

In the event of a trip the drive keypad will display a trip code to indicate the fault. Below are the trip codes specific to Pump Solutions related faults. The M400 drive trip codes can be found in the User Guide.

Pr 10.20 through Pr 10.29 display the last 10 trips in the drive with Pr 10.20 being the most recent and Pr 10.29 the oldest.

ACTIVE FAULT

Tr81 = Feedback Loss Fault
Tr82 = Over Pressure Fault
Tr83 = Under Pressure Fault
Tr84 = Dry Well/Broken Shaft Fault

Tr85 = External Pump Fault
Tr86 = Overcycle
Tr87 = Over Temperature Fault Input
Tr88 = Flow rate out of Bandwidth (from CTVue)
Tr89 = User injected Test Fault

12.3 Pump Alarm Indicator Parameters

10.001	Drive Healthy (if zero, a Fault Indicator)
Pr 30.040	Ready for Operation (no fault)
Pr 30.041	Over Pressure Warning
Pr 30.044	Transducer Loss Indicator
Pr 30.046	Dry Well
Pr 30.049	Under Pressure Fault
Pr 18.033	GPM out of Bandwidth (from CTVue)

These are binary indicators where a value of 1 = an alarm or fault is present.

12.4 Resetting Trips

12.4.1 Automatic Reset

If Pr 10.034 is set to zero then no auto reset attempts are made. Any other value will cause the drive to automatically reset following a trip for the number of times programmed. Pr 10.035 defines the time between the trip and the auto reset (this time is always at least 10s for OI.AC, OI.br trips, etc.). The reset attempt count is only incremented when the trip is the same as the previous trip, otherwise it is reset to 0. When the reset count reaches the programmed value, any further trip of the same value will not cause an auto reset. If there has been no trip for 5 minutes then the reset count is cleared. Auto reset will not occur on UU, Et, EEF or HFxx trips. When a manual reset is performed the auto reset counter is reset to zero.

12.4.2 Manual Reset

Pressing the Stop/Reset (red) button on the drive keypad will attempt to reset all fault conditions.

If the optional SI-I/O module is installed an input terminal can be designated as the fault reset. An external push button or other device may be connected to reset trips.

13 Differences from SK Simplex Pump

Menu 30. This feature allows for custom application menus. Most of the user settings that were in menu 18 are moved to menu 30. Decimal positions are no longer implied as custom menus supports decimals and range definitions.
Due to the availability of custom menus most of the menu/parameter numbers are changed from the SK Simplex pump.
The pressure switch and the three modes are removed. The pressure transducer is required for the M400 Simplex Pump.
The Flow switch now works as a redundant pump idle (sleep) initiator.

Pipe fill now has a speed definition and a max pressure completion. The pipe fill time is still defined. If the pipe fill pressure is disabled, or is not met in pipe fill, the timer will complete pipe fill.

The Keypad control for Auto and Hand Mode has been removed from the M400 Simplex Pump.

A flow meter input (Total Gallons and Gallons per minute) is supported in the M400

STO safe torque used with M400.

Added the term “Software” to “Software No Flow”. It was just for documentation clarification.

Stop conditions all have their own time filters. (Sleep, Software No flow, No Flow Switch)

Over Cycle protection added

An Input function to enable the pump was added.

14 Menu 0 Reference

14.1.1 Summary Menu 0 Keypad Parameters

When changing a parameter in Menu 0, the new value is saved when pressing the Enter button. If parameters have been changed in the advanced menus, then the change will not be saved automatically. A save function must be carried out (Pr 00.000 = 1001).

For ease of operation, the following Menu 0 parameters(Pr) are configured in the pump program:

Parameter	Description	Adv Menu	Type	Units	Range	Default
Pr 0.001	Minimum Set Speed	Pr 1.007	RW	Hz	0-1500.00	0.00
Pr 0.002	Maximum Set Speed	Pr 1.006	RW	Hz	0-1500.00	60.00
Pr 0.003	Acceleration Rate	Pr 2.011	RW	s/100Hz	0-3200.0	5.0
Pr 0.004	Deceleration Rate	Pr 2.021	RW	s/100Hz	0-3200.0	10.0
Pr 0.005	Motor Rated Frequency	Pr 5.006	RW	Hz	0 to 550.00	0.00
Pr 0.006	Motor Rated Current	Pr 5.007	RW	Amps	-	0
Pr 0.007	Motor Rated RPM	Pr 5.008	RW	RPM	0-9999	0
Pr 0.008	Motor Rated Voltage	Pr 5.009	RW	Volts	-	-
Pr 0.009	Motor Power Factor	Pr 5.010	RW	-	0-1.00	0.85
Pr 0.010	Security Status	Pr 11.044	RW	-	-	L3
Pr 0.011		Pr 0.000				
Pr 0.012	Analog 1 Input Mode	Pr 7.007	RW	-	-	4
Pr 0.013	Minimum Pressure Feedback Scaling	Pr 30.022	RW	-	0 – 6553.5	0.0
Pr 0.014	Maximum Pressure Feedback Scaling	Pr 30.023	RW	-	0 – 6553.5	150.0
Pr 0.015	Transducer Loss Action	Pr 30.017	RW	-	0-ignore, 1-tTr81, 3-Fixed speed	1
Pr 0.016	Transducer Loss Speed setting	Pr 1.027	RW	Hz	+/-1500.0	0.00
Pr 0.017	Pressure Transducer Filter	Pr 12.015	RW	s	0.00 to 100.00	0.00
Pr 0.018	Low Pressure Setpoint (Wake Pressure)	Pr 30.013	RW	PSI	0 – 6553.5	30.0
Pr 0.019	Start Delay Time	Pr 30.059	RW	s	0 – 6553.5	0.0
Pr 0.020	No Flow Switch Delay Time	Pr 30.060	RW	s	0 – 6553.5	5.0
Pr 0.021	Minimum Sleep Frequency	Pr 30.051	RW	Hz	0 – 655.35	0.00
Pr 0.022	Sleep Start Time	Pr 30.052	RW	s	0 – 6553.5	0.0
Pr 0.023	HAND Mode Speed	Pr 1.021	RW	Hz	+/-1500.0	0
Pr 0.024	GPMLow Stop	Pr 30.004	RW	gpm	± 3276.7	1.0
Pr 0.025	GPM Low Stop Delay	Pr 30.005	RW	sec	0 – 6553.5	0.0
Pr 0.026	Over Pressure Alarm Level	Pr 30.020	RW	PSI	0 – 6553.5	0.0
Pr 0.027	Over Pressure Trip Level	Pr 30.021	RW	PSI	0 – 6553.5	0.0
Pr 0.028	Max Frequency Bandwidth	Pr 30.057	RW	Hz	0 – 655.35	1.00
Pr 0.029	Under pressure Detect Time	Pr 30.058	RW	s	0 – 6553.5	0.0
Pr 0.030	Under Pressure Mode	Pr 30.050	RW	-	0 – Pressure Setpoint 1 –level 30.014	0
Pr 0.031	Under Pressure Level	Pr 30.014	RW	PSI	0 – 6553.5	0.0
Pr 0.032	Pressure Main Setpoint	Pr 30.030	RW	PSI	0 – 6553.5	80.0
Pr 0.033	Pressure Setpoint 1	Pr 30.024	RW	PSI	0 – 6553.5	0.0

Parameter	Description	Adv Menu	Type	Units	Range	Default
Pr 0.034	Pressure Set point Bandwidth	Pr 30.015	RW	PSI	0 to 25.5	0.5
Pr 0.035	Pipe Fill Speed setting	Pr 1.026	RW	Hz	O to max	0.00
Pr 0.036	Pipe Fill Time	Pr 30.061	RW	s	0 – 6553.5	0.0
Pr 0.037	PipeFill MaxPressure	Pr 30.029	RW	PSI	0 – 6553.5	0.0
Pr 0.038	Kp Proportional Gain	Pr 14.010	RW	gain	0 - 4.000	1.000
Pr 0.039	Ki Integral Time	Pr 14.011	RW	sec	0 - 4.000	.500
Pr 0.040	Kd Differential Rate	Pr 14.012	RW	d/dt	0 - 4.000	0.000
Pr 0.041	No Flow Freq (RPM) Setpoint	Pr 30.054	RW	Hz	0 – 655.35	20.00
Pr 0.042	No Flow Freq (RPM) Bandwidth	Pr 30.053	RW	Hz	0.00 - 655.35	6.00
Pr 0.043	No Flow Constant Freq Delay	Pr 30.056	RW	sec	0 – 6553.5	15.0
Pr 0.044	Pressure Setpoint Decrement	Pr 30.027	RW	PSI	0 to 25.5	1.0
Pr 0.045	No Flow Stabilizing Delay	Pr 30.055	RW	sec	0 – 6553.5	15.0
Pr 0.046	Speed/Torque Low Load Point	Pr 30.063	RW	%	0 – 100.0	0.0
Pr 0.047	Drive Well Detection mode	Pr 30.018	RW	-	O to 2	2
Pr 0.048	Dry Well Detection Delay	Pr 30.062	RW	sec	0 – 6553.5	0.0
Pr 0.049	Low Suction Frequency Decrement	Pr 30.064	RW	%	0 – 100.00	0.00
Pr 0.050	Gallons Scale	Pr 18.012	RW	.0001 Gallons/Count	± 32767	0
Pr 0.051	GPM Scale	Pr 18.013	RW	.001 GPM/count	± 32767	0
Pr 0.052						
Pr 0.053						
Pr 0.054	On-Board User Program Enable	Pr 11.047	RW	-	0 stop 1 Run	1 -run
Pr 0.055	Software Version 0: resets application defaults	Pr 30.028	RO	-	0 – 65535	App 10000
Pr 0.056						
Pr 0.057	Motor Frequency	Pr 5.001	RO	Hz	0.00 to max	-
Pr 0.058	Current Magnitude	Pr 4.001	RO	A	Drive specific	-
Pr 0.059	Pressure Feedback Value	Pr 30.009	RO	-	0 – 6553.5	-
Pr 0.060	Selected Pressure Setpoint Value	Pr 30.011	RO	PSI	0 - 6553.5	-
Pr 0.061	Final Pressure Setpoint with Inc & Dec	Pr 30.012	RO	PSI	0 - 6553.5	-
Pr 0.062	PID Error	Pr 30.010	RO	PSI	± 3276.7	-
Pr 0.063	GPM	Pr 30.006	RO		± 3276.7	
Pr 0.064	Gallons Total	Pr 30.007	RO		0 to 2147483647	
Pr 0.065	Clear Gallons	18.035	RW	-	0 – none 1 - clear	0
Pr 0.066						
Pr 0.067	AUTO Mode Selected Digital Output	Pr 30.047	RO	-	0 - 1	
Pr 0.068	HAND Mode Selected Digital Output	Pr 30.048	RO	-	0 - 1	
Pr 0.069	Trip Log #0 (Last trip)	Pr 10.020	RO	-	0 - 255	-
Pr 0.070	Trip log #1	Pr 10.021	RO	-	0 - 255	-
Pr 0.071	Trip log #2	Pr 10.022	RO	-	0 - 255	-
Pr 0.072	Trip log #3	Pr 10.023	RO	-	0 - 255	-
Pr 0.073	Trip log #4	Pr 10.024	RO	-	0 - 255	-
Pr 0.074						

Parameter	Description	Adv Menu	Type	Units	Range	Default
Pr 0.075	Symmetrical Current Limit	Pr 4.007	RW	%	To motor current limit	110.0
Pr 0.076	Control Mode (Drive Output mode: Voltage/Current)	Pr 5.014	RW	-	-	FD (Fixed)
Pr 0.077	Auto Reset No.	Pr 10.034	RW	-	0 to 6	5
Pr 0.078	Auto Reset Delay	Pr 10.035	RW	sec	0.0 to 600.00	10
Pr 0.079						
Pr 0.080						

For more information about Control Techniques products and services, call (800) 893-2321 or contact our website at www.controltechniques.com.

Nidec Control Techniques
7078 Shady Oak Road
Eden Prairie, Minnesota 55344 U.S.A.
Customer Service
Phone: (952) 995-8000 or (800) 893-2321
Fax: (952) 995-8129
Technical Support
Phone: (952) 995-8033 or (800) 893-2321
Fax (952) 9995-8020